41-025400.0000

KITTLE BRIAN S & MELISSA J
KITTLE BRIAN S & MELISSA J
215 S GREEN STA
MENDON, OH 45862

UNION TWP-MENDON CORP / PARKWAY SD
03-21-479-015

LEGAL INFORMATION
PT SE SE

RTS: 003-04-21

Property Class: 510
Neighborhood 004101-TM20
Map: 19
Block:
Card: 125
Bk: Pg:

	OWNERSHIP	ADDRESS	CITY	STATE	ZIP	DATE	AMOUNT	DEED:CONV#	JS	VALID
1	KITTLE BRIAN S & MELISSA J	215 S GREEN STA	MENDON	OH	45862	05/10/2019	27,000	WDC : 302	☐	■
2	MOORE KEELY D	215 S GREEN ST	MENDON	OH	45862	12/17/2002	51,500	: A : 0	☐	■
3							0	0	☐	☐

X: ☐ TTO LISTER: CL DATE: 09/21/2004 TIME: 01:41:37 PM ☐ LETTER ■ LETTER REC'D GIS CODE

STREET/ROAD	TOPOGRAPHY	PU-UTILITIES-PR	NEIGHBORHOOD	INFLUENCE FACTORS	
■ PAVED	■ LEVEL	■ WATER ☐	☐ IMPROVING	☐ A. NO ROAD	☐ F. RESTRICT
☐ GRAVEL	☐ HIGH	☐ SEWER ■	■ STATIC	☐ B. TOPGRHY	☐ G. WOOD LT
☐ DIRT	☐ LOW	■ GAS ☐	☐ DECLINING	☐ C. Ex Front	☐ H. VACANCY
☐ SIDEWALKS	☐ ROLLING	■ ELECTRIC ☐	☐ OLD	☐ D. QUANTITY	☐ I. WATER FRONT
☐ CURBS	☐ STANDARD	■ STANDARD	☐ STANDARD	☐ E. SZ/SHAPE	☐ J. OTHER/CDU

PROPERTY LOCATION
215 S GREEN ST, MENDON

COMMENT
TY2022:Net Gen=$1,034.36, Other Assessment=$2.00
DE16 REVAL DESKTOP REVIEW CORR SKETCH
DE21 ADD AC & COR PLMG PER DATA MAILER

LAND COMPUTATIONS

LAND TYPE	SIZE	M RATE C	INF	M VALUE C
F:Front	F72 D132	ST160 DP94 ADJ150		10,800 0
			TOTAL	10,800 0

VALUATION SUMMARY

VALUE YEAR		2023	2021	2020	2017				
REASON FOR CHANGE		RAPP	MISC	RAPP	RAPP				
APPRAISED VALUE	LAND	10,800	8,900	8,900	6,800				
	IMPR	95,100	56,600	55,100	46,800				
	TOTAL	105,900	65,500	64,000	53,600				
ASSESSED VALUE	LAND	3,780	3,120	3,120	2,380				
	IMPR	33,290	19,810	19,290	16,380				
	TOTAL	37,070	22,930	22,410	18,760				

OCCUPANCY	EXTERIOR
■ SF ☐ DU ☐ TR	☐ WOOD
☐ CONVERSION	☐ STUCCO
BUILDING TYPE	■ ALM/VYNL
☐ MOBILE HOME	☐ CONC BLK
☐ BI/TR LEVEL	☐ METAL
☐ MOD/MAN	☐ BRICK
☐ _____	☐ STONE

ROOFING	ROOF TYPE
☐ METAL	■ GABLE
☐ SLT/TLE	☐ HIP
■ SHINGLES	☐ GAMBREL
☐ SHAKES	☐ MANSARD
☐ COMPOSITE	☐ FLAT

FLOORS	B	1	2	3	U
CONCRETE	☐	☐	☐	☐	☐
WOOD	☐	■	☐	☐	☐
TILE/COMPO	☐	☐	☐	☐	☐
CARPET	☐	■	☐	☐	☐

INT. FINISH	B	1	2	3	U
PLASTER/DW	☐	■	☐	☐	☐
PANELING	☐	☐	☐	☐	☐
UNFINISHED	☐	☐	☐	☐	☐

ACCOMMODATIONS					
# OF ROOMS		5			
BEDROOMS		2			
FIREPLACES					

HEAT & AC	B	1	2	3	U
NO HEAT	☐	☐	☐	☐	☐
CTRL HEAT	☐	■	☐	☐	☐
HW/STEAM	☐	☐	☐	☐	☐
ELECTRIC	☐	☐	☐	☐	☐
HEAT PUMP	☐	☐	☐	☐	☐
FLR/WALL	☐	☐	☐	☐	☐
STVE/SPCE	☐	☐	☐	☐	☐
GEOTHERMAL	☐	☐	☐	☐	☐
OUTSIDE	☐	☐	☐	☐	☐
CTRL A/C	☐	■	☐	☐	☐

PLUMBING	BASE ■			
X FULL BATH		1		
X HALF BATH				
X FIXTURES				

FLOOR	AREA	CONST	VALUE
1	1584	FR	208,310

SUBTOTAL			208,310
MULTI-FAMILY #	0		0
BUILDING TYPE	100%		0
BSMT FINISH	0	S.F.	0
FIREPLACE #	0		0
HEATING	0	S.F.	0
AIR COND	1,584	S.F.	2,610
PLUMBING #	3		3,630
GARAGES & CARPORTS			0
EXTRA FEATURES			4,000
SUBTOTAL			218,550
GRADE FACTOR			100 %
UNADJUSTED VALUE			218,550
FACTOR			100 %

SKETCH

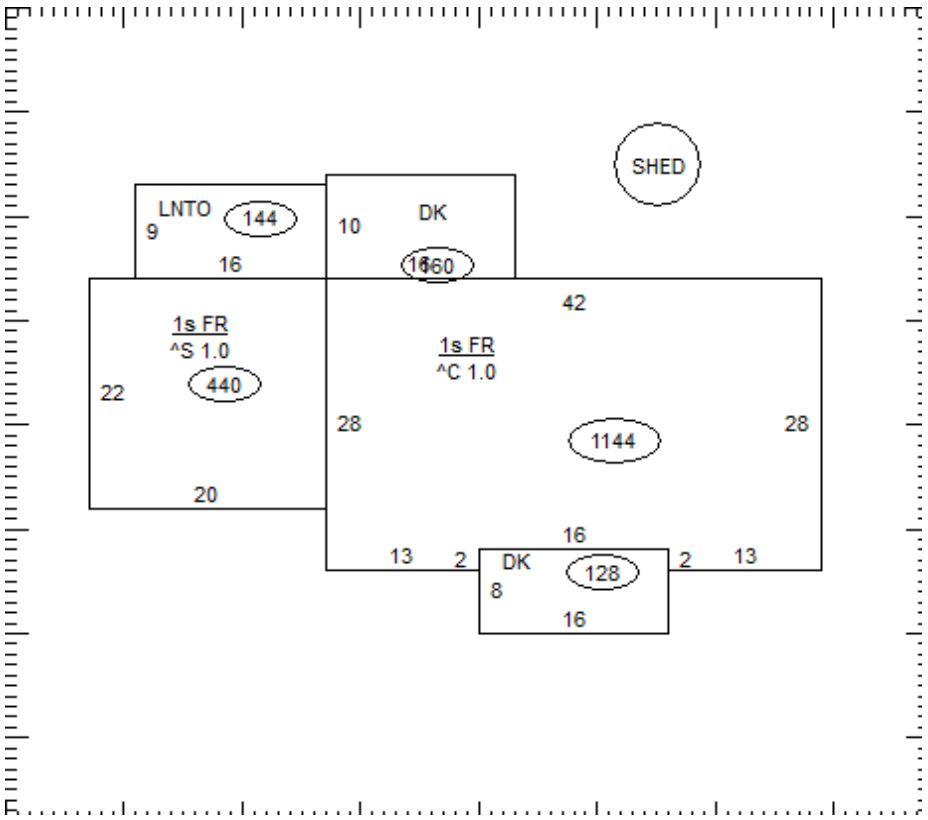

OCCUPANCY	ST.HT	SIZE	AREA	GRADE	PRICE	AGE	REMD	CND	UNADJ VAL	PHYS	PHYS VAL	FUNC	TRUE VAL
DWELLING	1	SK	1,584	C		1955		A	218,550	42	126,760		95,100
1 Shed		6x8	48	C		2005		A		31			0
2													
3													
4													
5													
6													
7													
8													
9													
10													
11													
											TOTAL		95,100

41-025400.0000

COMMENTS

Dwelling has an Economic Factor of 75%