40-044900.0000

UNION TWP / PARKWAY SD

03-28-400-005

Property Class: 510

Neighborhood 009405-R150

Map: 08
Block:
Card: 43
Bk: Pg:

WATSON STEWART T & TESS N
WATSON STEWART T & TESS N
10611 CELINA MENDON RD
MENDON, OH 45862

LEGAL INFORMATION
ESMONDE SUBDIVISION
PT SW SE
RTS: 003-04-28 LOTS 1 & 2
Acres:2.0000

	OWNERSHIP	ADDRESS	CITY	STATE	ZIP	DATE	AMOUNT	DEED:CONV#	JS	VALID
1	WATSON STEWART T & TESS	10611 CELINA MENDON RD	MENDON	OH	45862	09/19/2019	190,000	WDC : 628	☐	■
2	CRON CHRISTOPHER & KARI	10611 CELINA MENDON RD	MENDON	OH	45862	07/10/2006	156,000	WDC : A-M : 553	☐	☐
3	HESSE MAX E & MELANIE A	10611 CELINA MENDON RD	MENDON	OH	45862		0	: 0	☐	☐

X: ☐ TTO LISTER: CL DATE: 09/13/2004 TIME: 03:52:54 PM ■ LETTER ☐ LETTER REC'D GIS CODE

STREET/ROAD	TOPOGRAPHY	PU-UTILITIES-PR	NEIGHBORHOOD	INFLUENCE FACTORS	
■ PAVED	■ LEVEL	☐ WATER ☐	☐ IMPROVING	☐ A. NO ROAD	☐ F. RESTRICT
☐ GRAVEL	☐ HIGH	☐ SEWER ☐	■ STATIC	☐ B. TOPGRHY	☐ G. WOOD LT
☐ DIRT	☐ LOW	☐ GAS ☐	☐ DECLINING	☐ C. Ex Front	☐ H. VACANCY
☐ SIDEWALKS	☐ ROLLING	☐ ELECTRIC ☐	☐ OLD	☐ D. QUANTITY	☐ I. WATER FRONT
☐ CURBS	☐ STANDARD	■ STANDARD	☐ STANDARD	☐ E. SZ/SHAPE	☐ J. OTHER/CDU

PROPERTY LOCATION
10611 CELINA MENDON RD, MENDON

COMMENT
TY2022:Net Gen=$2,089.90, Other Assessment=$4.00
DE15 ADD C/A PER DATA MAILER

LAND COMPUTATIONS

LAND TYPE	SIZE	M RATE C	INF	M VALUE C
HS:Home Site	AC:1	19710		19,700 0
SM:Small Acreage	AC:1	8500		8,500 0
Total Acres: 2.0000			TOTAL	28,200 0

VALUATION SUMMARY

VALUE YEAR		2023	2020	2017					
REASON FOR CHANGE		RAPP	RAPP	RAPP					
APPRAISED VALUE	LAND	28,200	26,800	23,500					
	IMPR	151,200	118,900	107,200					
	TOTAL	179,400	145,700	130,700					
ASSESSED VALUE	LAND	9,870	9,380	8,230					
	IMPR	52,920	41,620	37,520					
	TOTAL	62,790	51,000	45,750					

OCCUPANCY	EXTERIOR
■ SF ☐ DU ☐ TR	☐ WOOD
☐ CONVERSION	☐ STUCCO
BUILDING TYPE	■ ALM/VYNL
☐ MOBILE HOME	☐ CONC BLK
☐ BI/TR LEVEL	☐ METAL
☐ MOD/MAN	■ BRICK
☐ _____	☐ STONE
ROOFING	**ROOF TYPE**
☐ METAL	■ GABLE
☐ SLT/TLE	☐ HIP
■ SHINGLES	☐ GAMBREL
☐ SHAKES	☐ MANSARD
☐ COMPOSITE	☐ FLAT

FLOORS	B	1	2	3	U
CONCRETE	■	☐	☐	☐	☐
WOOD	☐	■	☐	☐	☐
TILE/COMPO	☐	☐	☐	☐	☐
CARPET	☐	■	☐	☐	☐

INT. FINISH	B	1	2	3	U
PLASTER/DW	■	■	☐	☐	☐
PANELING	☐	☐	☐	☐	☐
UNFINISHED	☐	☐	☐	☐	☐

ACCOMMODATIONS					
# OF ROOMS		6			
BEDROOMS		3			
FIREPLACES					

HEAT & AC	B	1	2	3	U
NO HEAT	☐	☐	☐	☐	☐
CTRL HEAT	■	■	☐	☐	☐
HW/STEAM	☐	☐	☐	☐	☐
ELECTRIC	☐	☐	☐	☐	☐
HEAT PUMP	☐	☐	☐	☐	☐
FLR/WALL	☐	☐	☐	☐	☐
STVE/SPCE	☐	☐	☐	☐	☐
GEOTHERMAL	☐	☐	☐	☐	☐
OUTSIDE	☐	☐	☐	☐	☐
CTRL A/C	☐	■	☐	☐	☐

PLUMBING	BASE ■			
X FULL BATH		1		
X HALF BATH				
X FIXTURES				

FLOOR	AREA	CONST	VALUE
1	1808	FR	221,260
BSMT	1808		25,850
SUBTOTAL			247,110
MULTI-FAMILY #	0		0
BUILDING TYPE	100%		0
BSMT FINISH	452 S.F.		6,460
FIREPLACE #	0		0
HEATING	0 S.F.		0
AIR COND	1,808 S.F.		2,980
PLUMBING #	3		3,630
GARAGES & CARPORTS			19,300
EXTRA FEATURES			1,400
SUBTOTAL			280,880
GRADE FACTOR			105 %
UNADJUSTED VALUE			294,920
FACTOR			100 %

SKETCH

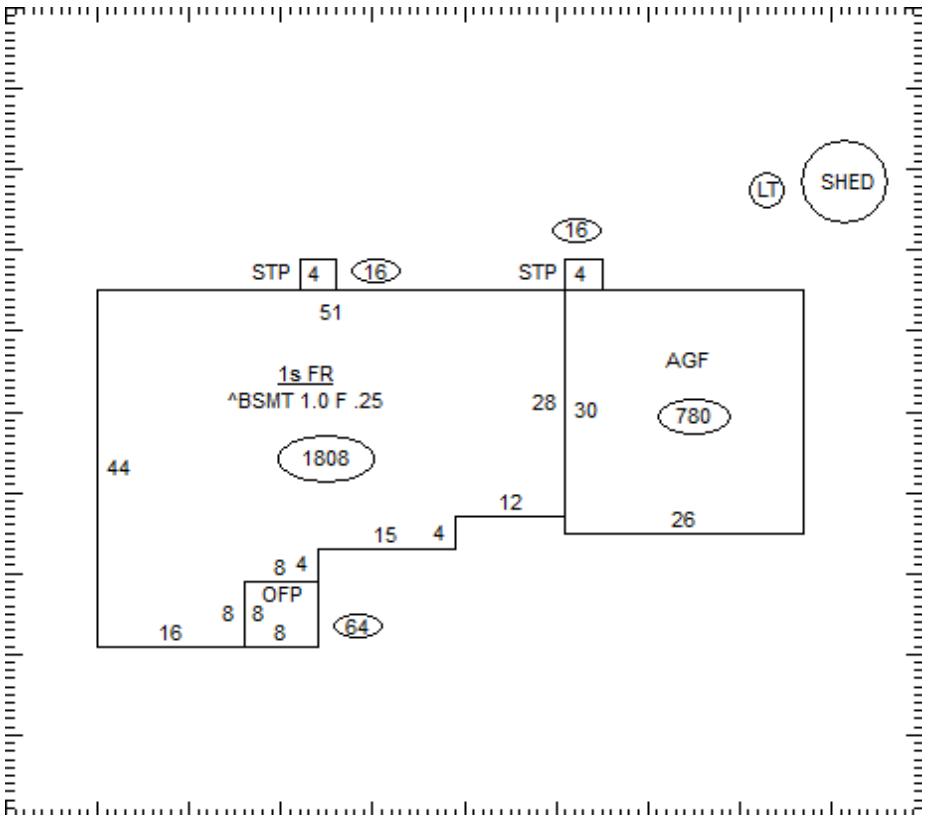

OCCUPANCY	ST.HT	SIZE	AREA	GRADE	PRICE	AGE	REMD	CND	UNADJ VAL	PHYS	PHYS VAL	FUNC	TRUE VAL
DWELLING	1	SK	1,808	C+		1972		A	294,920	40	176,950		150,400
1 Shed	7	12x20	240	C	7.70	1976		A	1,850	80	370		400
2 Lean - To	7	20x9	180	D	3.84	1999		A	690	38	430		400
3													
4													
5													
6													
7													
8													
9													
10													
11													
											TOTAL		151,200

40-044900.0000

COMMENTS

MAIN FRAME w/MS 50 L/F X 4' BRICK
Dwelling has an Economic Factor of 85% (Rollback Basis=$170,100)