38-003400.0300

RECOVERY TWP / FT RECOVERY SD

10-04-100-007

Property Class: 510

Neighborhood 009385-R150

Map:
Block:
Card:
Bk: Pg:

GREY ERIK L & JESSICA N
GREY ERIK L & JESSICA N
1218 SIEGRIST JUTTE RD
FORT RECOVERY, OH 45846
Created in 2005 From 38-003400.0000 due to Split

LEGAL INFORMATION
E PT NE NW

RTS: 001-07-04
Acres:5.0070

	OWNERSHIP	ADDRESS	CITY	STATE	ZIP	DATE	AMOUNT	DEED:CONV#	JS	VALID
1	GREY ERIK L & JESSICA N	1218 SIEGRIST JUTTE RD	FORT RECOVERY	OH	45846	05/15/2023	785,000	WDC : 255	☐	■
2	BENSMAN MORRIS & KAREN	1218 SIEGRIST JUTTE RD	FORT RECOVERY	OH	45846	09/29/2004	35,000	WDC : A : 0	☐	■
3							0	0	☐	☐

X: ☐ TTO LISTER: BTC DATE: 08/20/2008 TIME: 12:00:00 AM ■ LETTER ☐ LETTER REC'D GIS CODE

STREET/ROAD	TOPOGRAPHY	PU-UTILITIES-PR	NEIGHBORHOOD	INFLUENCE FACTORS	
■ PAVED	■ LEVEL	☐ WATER ☐	☐ IMPROVING	☐ A. NO ROAD	☐ F. RESTRICT
☐ GRAVEL	☐ HIGH	☐ SEWER ☐	☐ STATIC	☐ B. TOPGRHY	☐ G. WOOD LT
☐ DIRT	☐ LOW	☐ GAS ☐	☐ DECLINING	☐ C. Ex Front	☐ H. VACANCY
☐ SIDEWALKS	☐ ROLLING	☐ ELECTRIC ☐	☐ OLD	☐ D. QUANTITY	☐ I. WATER FRONT
☐ CURBS	☐ STANDARD	■ STANDARD	■ STANDARD	☐ E. SZ/SHAPE	☐ J. OTHER/CDU

PROPERTY LOCATION
1218 SIEGRIST JUTTE RD

COMMENT
TY2022:Net Gen=$5,457.00, Other Assessment=$0.76
DE09 DATA MAILER-CORR SQ FTG OF PB
DE08 RMV INC
DE17 DESKTOP REVIEW//CORR STRY HGHT; CORR OFP TO PORTICO

LAND COMPUTATIONS

LAND TYPE	SIZE	M RATE C	INF	M VALUE C
HS:Home Site	AC:1	34360		34,400 0
SM:Small Acreage	AC:4.007	7700		30,900 0
Total Acres: 5.0070			TOTAL	65,300 0

VALUATION SUMMARY

VALUE YEAR		2023	2020	2017	2017	2017			
REASON FOR CHANGE		RAPP	RAPP	RAPP	MISC	MISC			
APPRAISED VALUE	LAND	65,300	49,200	41,300	43,800	43,800			
	IMPR	563,200	437,500	379,600	367,900	371,400			
	TOTAL	628,500	486,700	420,900	411,700	415,200			
ASSESSED VALUE	LAND	22,860	17,220	14,460	15,330	15,330			
	IMPR	197,120	153,130	132,860	128,770	129,990			
	TOTAL	219,980	170,350	147,320	144,100	145,320			

OCCUPANCY	EXTERIOR
☐SF ☐DU ☐TR	■ WOOD
☐CONVERSION	☐ STUCCO
BUILDING TYPE	☐ ALM/VYNL
☐ MOBILE HOME	☐ CONC BLK
☐ BI/TR LEVEL	☐ METAL
☐ MOD/MAN	☐ BRICK
☐ _____	■ STONE

ROOFING	ROOF TYPE
☐ METAL	■ GABLE
☐ SLT/TLE	☐ HIP
■ SHINGLES	☐ GAMBREL
☐ SHAKES	☐ MANSARD
☐ COMPOSITE	☐ FLAT

FLOORS	B	1	2	3	U
CONCRETE	■	☐	☐	☐	☐
WOOD	☐	■	☐	☐	☐
TILE/COMPO	☐	☐	☐	☐	☐
CARPET	■	☐	☐	☐	☐

INT. FINISH	B	1	2	3	U
PLASTER/DW	■	■	☐	☐	☐
PANELING	☐	☐	☐	☐	☐
UNFINISHED	■	☐	☐	☐	☐

ACCOMMODATIONS	B	1	2	3	U
# OF ROOMS	4	4			
BEDROOMS		3			
FIREPLACES		1			

HEAT & AC	B	1	2	3	U
NO HEAT	☐	☐	☐	☐	☐
CTRL HEAT	■	■	☐	☐	☐
HW/STEAM	☐	☐	☐	☐	☐
ELECTRIC	☐	☐	☐	☐	☐
HEAT PUMP	☐	☐	☐	☐	☐
FLR/WALL	☐	☐	☐	☐	☐
STVE/SPCE	☐	☐	☐	☐	☐
GEOTHERMAL	☐	☐	☐	☐	☐
OUTSIDE	☐	☐	☐	☐	☐
CTRL A/C	☐	■	☐	☐	☐

PLUMBING	BASE ■				
X FULL BATH	1				
X HALF BATH		1			
X FIXTURES		1			

FLOOR	AREA	CONST	VALUE
1	2586	FR	278,820
.25	262	FR	25,810
2ND	484	FR	25,050
BSMT	1974		28,230
SUBTOTAL			357,910
MULTI-FAMILY #	0		0
BUILDING TYPE	100%		0
BSMT FINISH	1,009	S.F.	14,430
FIREPLACE #	1		4,400
HEATING	0	S.F.	0
AIR COND	2,586	S.F.	4,270
PLUMBING #	6		7,260
GARAGES & CARPORTS			14,100
EXTRA FEATURES			23,600
SUBTOTAL			425,970
GRADE FACTOR			130 %
UNADJUSTED VALUE			553,760
FACTOR			100 %

SKETCH

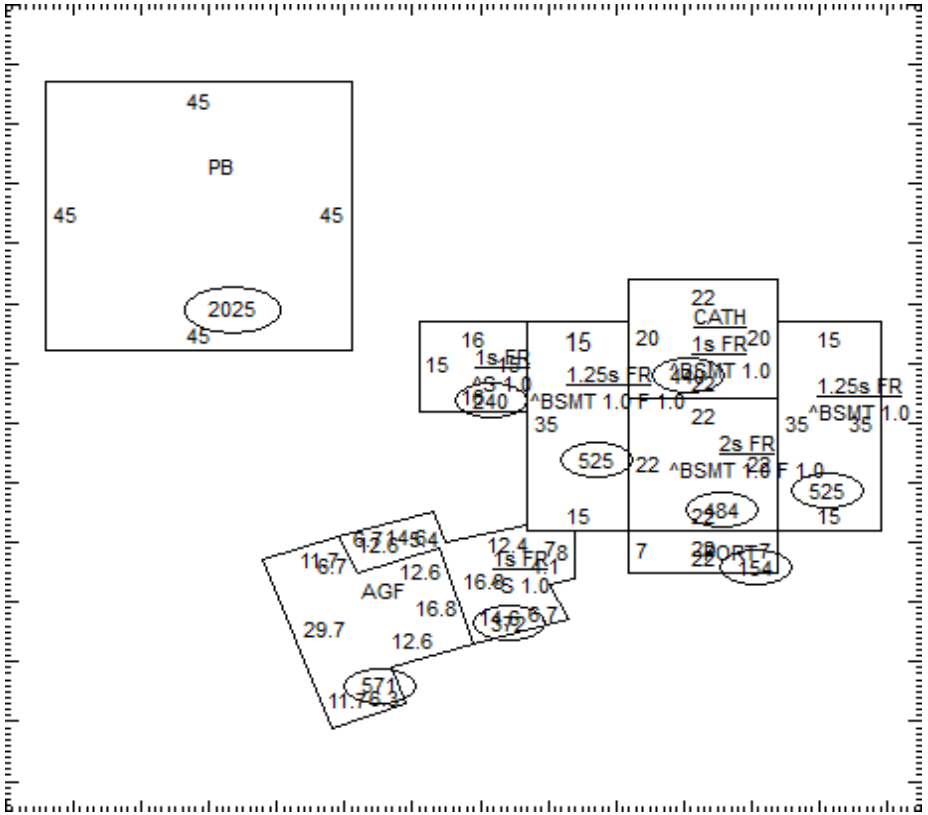

OCCUPANCY	ST.HT	SIZE	AREA	GRADE	PRICE	AGE	REMD	CND	UNADJ VAL	PHYS	PHYS VAL	FUNC	TRUE VAL
DWELLING	2	SK	3,332	B+		2006		A	553,760	15	470,700		541,300
1 Pole Bldg		45x45	2,025	C	15.25	2006		A	30,880	29	21,920		21,900
2													
3													
4													
5													
6													
7													
8													
9													
10													
11													
											TOTAL		563,200

38-003400.0300

COMMENTS

pole bldg- plumbing (full bathrm), heating, concrete fl
>>OB Features: 1.1 <Add Concrete Floor>
Dwelling has an Economic Factor of 115%