35-023300.0000

BERNHOLD BRUCE D & AUDRA J
BERNHOLD BRUCE D & AUDRA J
71 S LINCOLN ST
CHICKASAW, OH 45826

MARION TWP-CHICKASAW CORP / MARION SD
12-15-228-002

LEGAL INFORMATION
SEITZ ADDITION
ALSO LOT 5
LOT#: 4

Property Class: 510
Neighborhood
003502-RS50
Map: 2A3
Block:
Card: 04
Bk: Pg:

	OWNERSHIP	ADDRESS	CITY	STATE	ZIP	DATE	AMOUNT	DEED:CONV#	JS	VALID
1	BERNHOLD BRUCE D &	71 S LINCOLN ST	CHICKASAW	OH	45826	08/25/2023	241,000	WDC : 514	☐	■
2	GRIESHOP MAURICE	46 FRANKLIN ST PO BOX	CHICKASAW	OH	45826	04/25/1986	52,600	: A : 0	☐	☐
3							0	0	☐	☐

X: ☐ TTO LISTER: NS DATE: 11/17/2004 TIME: 12:00:00 AM ☐ LETTER ■ LETTER REC'D GIS CODE

STREET/ROAD	TOPOGRAPHY	PU-UTILITIES-PR	NEIGHBORHOOD	INFLUENCE FACTORS	
■ PAVED	■ LEVEL	■ WATER ☐	☐ IMPROVING	☐ A. NO ROAD	☐ F. RESTRICT
☐ GRAVEL	☐ HIGH	☐ SEWER ■	■ STATIC	☐ B. TOPGRHY	☐ G. WOOD LT
☐ DIRT	☐ LOW	■ GAS ☐	☐ DECLINING	☐ C. Ex Front	☐ H. VACANCY
☐ SIDEWALKS	☐ ROLLING	■ ELECTRIC ☐	☐ OLD	☐ D. QUANTITY	☐ I. WATER FRONT
☐ CURBS	☐ STANDARD	☐ STANDARD	☐ STANDARD	☐ E. SZ/SHAPE	☐ J. OTHER/CDU

PROPERTY LOCATION
46 W FRANKLIN ST, CHICKASAW

COMMENT
TY2022:Net Gen=$2,184.20, Other Assessment=$0.00
DE16 DESK TOP REVIEW//CORR OFP TO CAN/STP
DE16 ADDED LOTS TOGETHER

LAND COMPUTATIONS

LAND TYPE	SIZE	M RATE C	INF	M VALUE C
F:Front	F120 D120	ST265 DP89 ADJ236		28,300 0
			TOTAL	28,300 0

VALUATION SUMMARY

VALUE YEAR		2023	2020	2017					
REASON FOR CHANGE		RAPP	RAPP	RAPP					
APPRAISED VALUE	LAND	28,300	18,000	13,300					
	IMPR	150,900	127,500	106,400					
	TOTAL	179,200	145,500	119,700					
ASSESSED VALUE	LAND	9,910	6,300	4,660					
	IMPR	52,820	44,630	37,240					
	TOTAL	62,730	50,930	41,900					

OCCUPANCY	EXTERIOR
■SF ☐DU ☐TR	☐ WOOD
☐CONVERSION	☐ STUCCO
BUILDING TYPE	■ ALM/VYNL
☐ MOBILE HOME	☐ CONC BLK
☐ BI/TR LEVEL	☐ METAL
☐ MOD/MAN	☐ BRICK
☐ _____	☐ STONE

ROOFING	ROOF TYPE
☐ METAL	■ GABLE
☐ SLT/TLE	☐ HIP
■ SHINGLES	☐ GAMBREL
☐ SHAKES	☐ MANSARD
☐ COMPOSITE	☐ FLAT

FLOORS	B	1	2	3	U
CONCRETE	■	☐	☐	☐	☐
WOOD	☐	■	☐	☐	☐
TILE/COMPO	☐	■	☐	☐	☐
CARPET	☐	■	☐	☐	☐

INT. FINISH	B	1	2	3	U
PLASTER/DW	☐	■	☐	☐	☐
PANELING	☐	☐	☐	☐	☐
UNFINISHED	■	☐	☐	☐	☐

ACCOMMODATIONS					
# OF ROOMS		6			
BEDROOMS		3			
FIREPLACES					

HEAT & AC	B	1	2	3	U
NO HEAT	☐	☐	☐	☐	☐
CTRL HEAT	☐	■	☐	☐	☐
HW/STEAM	☐	☐	☐	☐	☐
ELECTRIC	☐	☐	☐	☐	☐
HEAT PUMP	☐	☐	☐	☐	☐
FLR/WALL	☐	☐	☐	☐	☐
STVE/SPCE	☐	☐	☐	☐	☐
GEOTHERMAL	☐	☐	☐	☐	☐
OUTSIDE	☐	☐	☐	☐	☐
CTRL A/C	☐	■	☐	☐	☐

PLUMBING					BASE ■
X FULL BATH					
X HALF BATH					
X FIXTURES		1			

FLOOR	AREA	CONST	VALUE
1	1481	FR	201,180
BSMT	1481		21,180
SUBTOTAL			222,360
MULTI-FAMILY #	0		0
BUILDING TYPE	100%		0
BSMT FINISH	0 S.F.		0
FIREPLACE #	0		0
HEATING	0 S.F.		0
AIR COND	1,481 S.F.		2,440
PLUMBING #	1		1,210
GARAGES & CARPORTS			9,600
EXTRA FEATURES			2,900
SUBTOTAL			238,510
GRADE FACTOR			100 %
UNADJUSTED VALUE			238,510
FACTOR			100 %

SKETCH

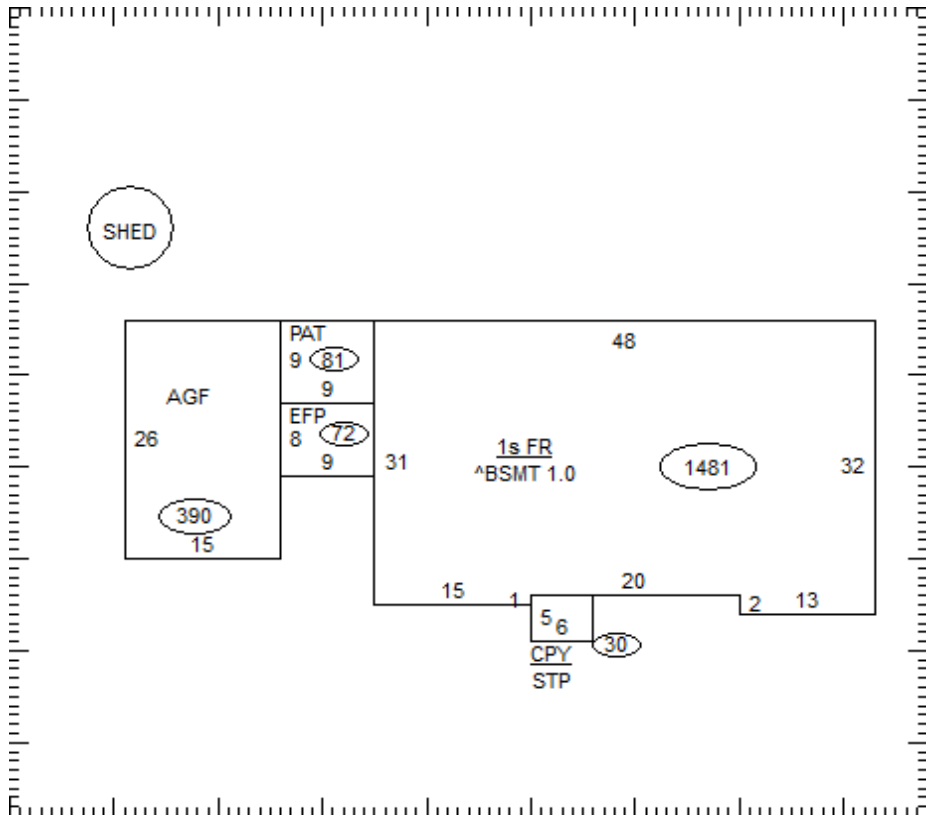

OCCUPANCY	ST.HT	SIZE	AREA	GRADE	PRICE	AGE	REMD	CND	UNADJ VAL	PHYS	PHYS VAL	FUNC	TRUE VAL
DWELLING	1	SK	1,481	C		1950		A	238,510	45	131,180		150,900
1 Shed		8x8	64	C		2000		A		37			0
2													
3													
4													
5													
6													
7													
8													
9													
10													
11													
											TOTAL		150,900

35-023300.0000

COMMENTS

Dwelling has an Economic Factor of 115%