35-006200.0000

MARION TWP-CHICKASAW CORP / MARION SD
12-14-104-002

MOELLER TYLER P & GELHAUS NICOLE L
MOELLER TYLER P & GELHAUS NICOLE L
84 E FRANKLIN ST
CHICKASAW, OH 45826

LEGAL INFORMATION
OLD PLAT
ALSO LOT 1
LOT#: 2

Property Class: 510
Neighborhood 003502-RS50
Map: 2A
Block:
Card: 02
Bk: Pg:

	OWNERSHIP	ADDRESS	CITY	STATE	ZIP	DATE	AMOUNT	DEED:CONV#	JS	VALID
1	MOELLER TYLER P &	84 E FRANKLIN ST	CHICKASAW	OH	45826	12/29/2017	225,000	2:WDC : 911	☐	■
2	KLOSTERMAN BRADLEY J &	84 E FRANKLIN ST	CHICKASAW	OH	45826	03/26/2013	0	3:QCE : X : 0	☐	☐
3	BERTKE GWEN M	84 E FRANKLIN ST	CHICKASAW	OH	45826	10/30/2009	90,000	WDC : A-M : 639	☐	■

X: ☐ TTO LISTER: JK DATE: 12/30/2013 TIME: 12:00:00 AM ☐ LETTER ☐ LETTER REC'D GIS CODE

STREET/ROAD	TOPOGRAPHY	PU-UTILITIES-PR	NEIGHBORHOOD	INFLUENCE FACTORS	
■ PAVED	■ LEVEL	■ WATER ☐	☐ IMPROVING	☐ A. NO ROAD	☐ F. RESTRICT
☐ GRAVEL	☐ HIGH	☐ SEWER ■	■ STATIC	☐ B. TOPGRHY	☐ G. WOOD LT
☐ DIRT	☐ LOW	■ GAS ☐	☐ DECLINING	☐ C. Ex Front	☐ H. VACANCY
☐ SIDEWALKS	☐ ROLLING	■ ELECTRIC ☐	☐ OLD	☐ D. QUANTITY	☐ I. WATER FRONT
☐ CURBS	☐ STANDARD	☐ STANDARD	☐ STANDARD	☐ E. SZ/SHAPE	☐ J. OTHER/CDU

PROPERTY LOCATION
84 E FRANKLIN ST, CHICKASAW

COMMENT
TY2022:Net Gen=$3,106.66, Other Assessment=$0.00
DE14 NOH- ADD ADDN, FB & FP
DE11 ADD WDDK
DE09 PER DATA MAILER ADDED AC
DE16 DESK TOP REVIEW//CORR DECK SIZE
DE16 ADDED LOTS TOGETHER (1 & 2)
DE19 REMOVE OWN OCC. Owner didn't ret app

LAND COMPUTATIONS

LAND TYPE	SIZE	M RATE C	INF	M VALUE C
F:Front	F140 D95	ST265 DP79 ADJ209		29,300 0
			TOTAL	29,300 0

VALUATION SUMMARY

VALUE YEAR		2023	2020	2017					
REASON FOR CHANGE		RAPP	RAPP	RAPP					
APPRAISED VALUE	LAND	29,300	18,700	13,900					
	IMPR	229,200	183,500	142,500					
	TOTAL	258,500	202,200	156,400					
ASSESSED VALUE	LAND	10,260	6,550	4,870					
	IMPR	80,220	64,230	49,880					
	TOTAL	90,480	70,780	54,750					

OCCUPANCY	EXTERIOR
■ SF ☐ DU ☐ TR	■ WOOD
☐ CONVERSION	☐ STUCCO
BUILDING TYPE	■ ALM/VYNL
☐ MOBILE HOME	☐ CONC BLK
☐ BI/TR LEVEL	☐ METAL
☐ MOD/MAN	☐ BRICK
☐ _____	☐ STONE

ROOFING	ROOF TYPE
■ METAL	■ GABLE
☐ SLT/TLE	☐ HIP
☐ SHINGLES	☐ GAMBREL
☐ SHAKES	☐ MANSARD
☐ COMPOSITE	☐ FLAT

FLOORS	B	1	2	3	U
CONCRETE	■	☐	☐	☐	☐
WOOD	☐	■	■	☐	☐
TILE/COMPO	☐	■	☐	☐	☐
CARPET	☐	☐	☐	☐	☐

INT. FINISH	B	1	2	3	U
PLASTER/DW	☐	■	■	☐	☐
PANELING	☐	☐	☐	☐	☐
UNFINISHED	■	☐	☐	☐	☐

ACCOMMODATIONS					
# OF ROOMS		5	2		
BEDROOMS		2	2		
FIREPLACES		1			

HEAT & AC	B	1	2	3	U
NO HEAT	☐	☐	☐	☐	☐
CTRL HEAT	☐	■	■	☐	☐
HW/STEAM	☐	☐	☐	☐	☐
ELECTRIC	☐	☐	☐	☐	☐
HEAT PUMP	☐	☐	☐	☐	☐
FLR/WALL	☐	☐	☐	☐	☐
STVE/SPCE	☐	☐	☐	☐	☐
GEOTHERMAL	☐	☐	☐	☐	☐
OUTSIDE	☐	☐	☐	☐	☐
CTRL A/C	☐	■	■	☐	☐

PLUMBING	BASE ■			
X FULL BATH		1		
X HALF BATH				
X FIXTURES				

FLOOR	AREA	CONST	VALUE
1	1359	FR	190,950
.25	202	FR	25,820
BSMT	858		12,270

SUBTOTAL		229,040
MULTI-FAMILY #	0	0
BUILDING TYPE	100%	0
BSMT FINISH	0 S.F.	0
FIREPLACE #	1	4,400
HEATING	0 S.F.	0
AIR COND	1,561 S.F.	2,570
PLUMBING #	3	3,630
GARAGES & CARPORTS		0
EXTRA FEATURES		8,800
SUBTOTAL		248,440
GRADE FACTOR		100 %
UNADJUSTED VALUE		248,440
FACTOR		100 %

SKETCH

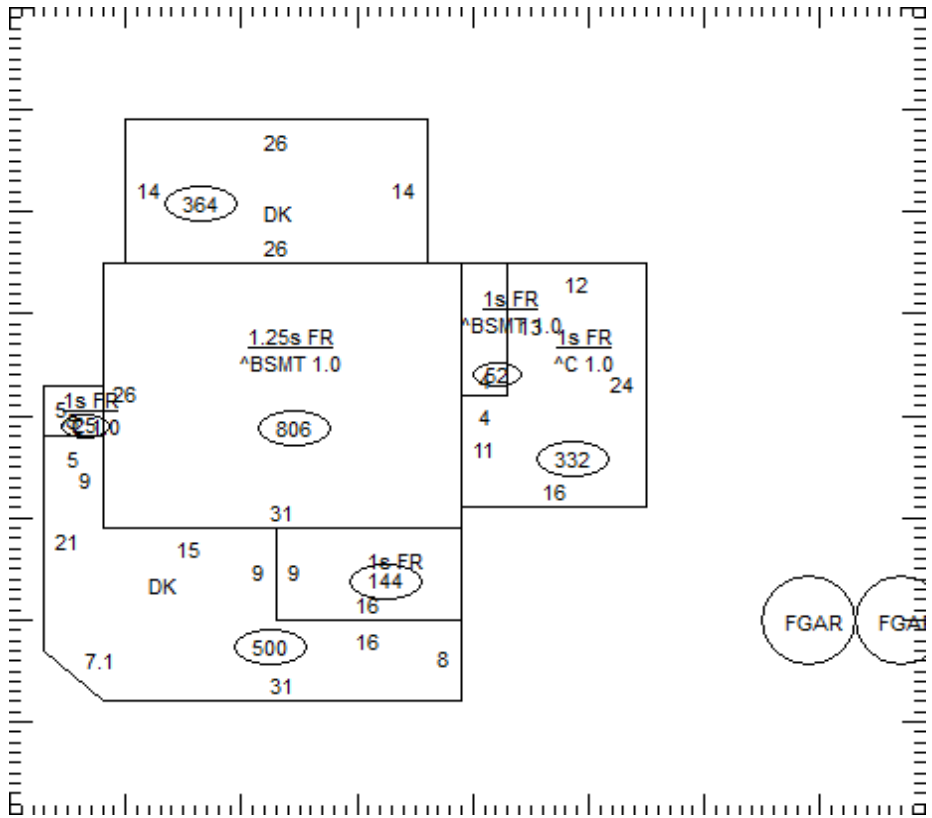

OCCUPANCY	ST.HT	SIZE	AREA	GRADE	PRICE	AGE	REMD	CND	UNADJ VAL	PHYS	PHYS VAL	FUNC	TRUE VAL
DWELLING	1.25	SK	1,561	C		1952	2013	G	248,440	24	188,810		217,100
1 Gar - Frame		24x26	624	C	23.70	1963		A	14,790	85	2,220		2,200
2 Gar - Frame		22x24	528	C	23.70	2010		A	12,510	21	9,880		9,900
3													
4													
5													
6													
7													
8													
9													
10													
11													
											TOTAL		229,200

35-006200.0000

COMMENTS

Dwelling has an Economic Factor of 115%

35-006200.0000

MARION TWP-CHICKASAW CORP / MARION SD
12-14-104-002

Property Class: 510
Neighborhood 003502-RS50
Map: 2A
Block:
Card: 02
Bk: Pg:

MOELLER TYLER P & GELHAUS NICOLE L
MOELLER TYLER P & GELHAUS NICOLE L
84 E FRANKLIN ST
CHICKASAW, OH 45826

LEGAL INFORMATION
OLD PLAT
ALSO LOT 1
LOT#: 2

	OWNERSHIP	ADDRESS	CITY	STATE	ZIP	DATE	AMOUNT	DEED:CONV#	JS	VALID
1	KLOSTERMAN BRADLEY J	84 E FRANKLIN ST	CELINA	OH	45822	09/25/2006	74,000	WDC : A-M : 772	☐	☐
2	TOPP FREDERICK J ETUX	84 E FRANKLIN ST	CELINA	OH	45822	05/18/2006	0	: 0	☐	☐
3							0	0	☐	☐

X: ☐ TTO LISTER: JK DATE: 12/30/2013 TIME: 12:00:00 AM ☐ LETTER ☐ LETTER REC'D GIS CODE

STREET/ROAD	TOPOGRAPHY	PU-UTILITIES-PR	NEIGHBORHOOD	INFLUENCE FACTORS	
■ PAVED	■ LEVEL	■ WATER ☐	☐ IMPROVING	☐ A. NO ROAD	☐ F. RESTRICT
☐ GRAVEL	☐ HIGH	☐ SEWER ■	■ STATIC	☐ B. TOPGRHY	☐ G. WOOD LT
☐ DIRT	☐ LOW	■ GAS ☐	☐ DECLINING	☐ C. Ex Front	☐ H. VACANCY
☐ SIDEWALKS	☐ ROLLING	■ ELECTRIC ☐	☐ OLD	☐ D. QUANTITY	☐ I. WATER FRONT
☐ CURBS	☐ STANDARD	☐ STANDARD	☐ STANDARD	☐ E. SZ/SHAPE	☐ J. OTHER/CDU

PROPERTY LOCATION
84 E FRANKLIN ST, CHICKASAW

COMMENT

LAND COMPUTATIONS

LAND TYPE	SIZE	M	RATE	C	INF	M	VALUE	C
					TOTAL		29,300	0

VALUATION SUMMARY

VALUE YEAR									
REASON FOR CHANGE									
APPRAISED VALUE	LAND								
	IMPR								
	TOTAL								
ASSESSED VALUE	LAND								
	IMPR								
	TOTAL								

OCCUPANCY	EXTERIOR
☐SF ☐DU ☐TR	☐ WOOD
☐CONVERSION	☐ STUCCO
BUILDING TYPE	☐ ALM/VYNL
☐ MOBILE HOME	☐ CONC BLK
☐ BI/TR LEVEL	☐ METAL
☐ MOD/MAN	☐ BRICK
☐ _____	☐ STONE

ROOFING	ROOF TYPE
☐ METAL	☐ GABLE
☐ SLT/TLE	☐ HIP
☐ SHINGLES	☐ GAMBREL
☐ SHAKES	☐ MANSARD
☐ COMPOSITE	☐ FLAT

FLOORS	B	1	2	3	U
CONCRETE	☐	☐	☐	☐	☐
WOOD	☐	☐	☐	☐	☐
TILE/COMPO	☐	☐	☐	☐	☐
CARPET	☐	☐	☐	☐	☐

INT. FINISH	B	1	2	3	U
PLASTER/DW	☐	☐	☐	☐	☐
PANELING	☐	☐	☐	☐	☐
UNFINISHED	☐	☐	☐	☐	☐

ACCOMMODATIONS					
# OF ROOMS					
BEDROOMS					
FIREPLACES					

HEAT & AC	B	1	2	3	U
NO HEAT	☐	☐	☐	☐	☐
CTRL HEAT	☐	☐	☐	☐	☐
HW/STEAM	☐	☐	☐	☐	☐
ELECTRIC	☐	☐	☐	☐	☐
HEAT PUMP	☐	☐	☐	☐	☐
FLR/WALL	☐	☐	☐	☐	☐
STVE/SPCE	☐	☐	☐	☐	☐
GEOTHERMAL	☐	☐	☐	☐	☐
OUTSIDE	☐	☐	☐	☐	☐
CTRL A/C	☐	☐	☐	☐	☐

PLUMBING					BASE ☐
X FULL BATH					
X HALF BATH					
X FIXTURES					

FLOOR	AREA	CONST	VALUE
SUBTOTAL			0
MULTI-FAMILY #	0		0
BUILDING TYPE	000%		0
BSMT FINISH	0 S.F.		0
FIREPLACE #	0		0
HEATING	0 S.F.		0
AIR COND	0 S.F.		0
PLUMBING #	0		0
GARAGES & CARPORTS			0
EXTRA FEATURES			0
SUBTOTAL			0
GRADE FACTOR			%
UNADJUSTED VALUE			0
FACTOR			%

SKETCH

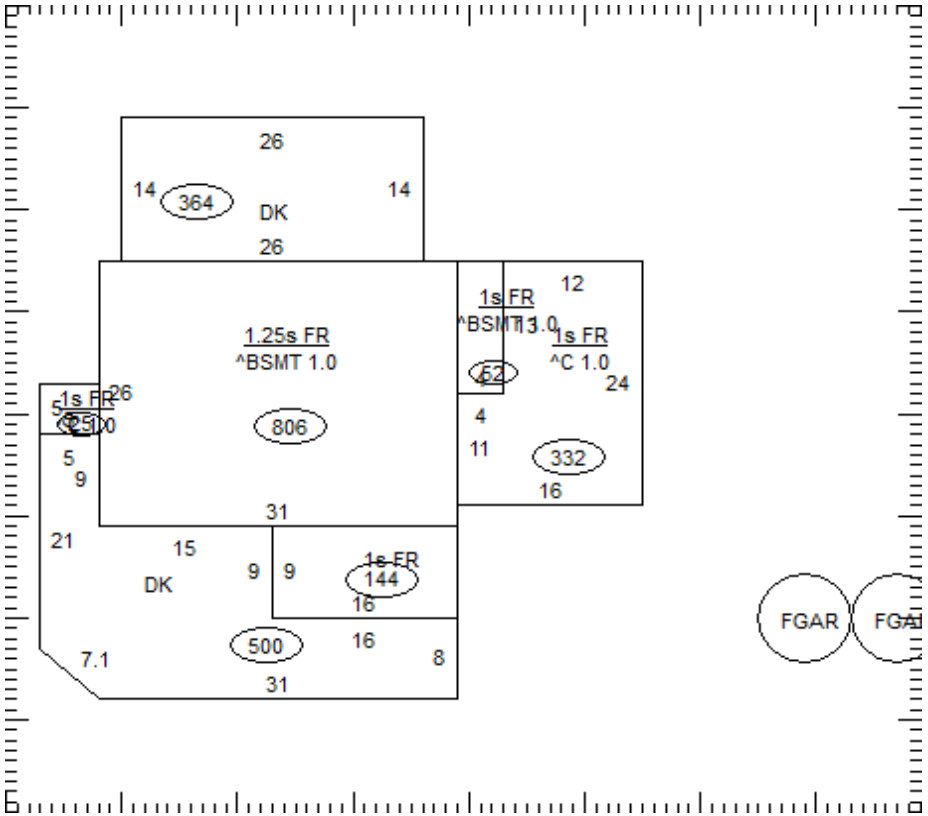

OCCUPANCY	ST.HT	SIZE	AREA	GRADE	PRICE	AGE	REMD	CND	UNADJ VAL	PHYS	PHYS VAL	FUNC	TRUE VAL
DWELLING		SK											
1													
2													
3													
4													
5													
6													
7													
8													
9													
10													
11													
												TOTAL	0

35-006200.0000

COMMENTS