31-076100.0000

BRUNS GREG M & TOBE ALYSSA A
BRUNS GREG M & TOBE ALYSSA A
705 E MAIN ST
COLDWATER, OH 45828

MARION TWP / MARION SD

LEGAL INFORMATION
W SD SW NW

RTS: 003-07-30
Acres:34.3500

12-30-100-004

QUALIFIED CREDITS: CAUV: 07117: 2023

Property Class: 111
Neighborhood 009311-A140
Map: 21
Block:
Card: 20
Bk: Pg:

	OWNERSHIP	ADDRESS	CITY	STATE	ZIP	DATE	AMOUNT	DEED:CONV#	JS	VALID
1	BRUNS GREG M & TOBE	705 E MAIN ST	COLDWATER	OH	45828	12/30/2022	379,500	WDC : 913	☐	■
2	DIPPOLD GARY	1773 STELZER RD	MARIA STEIN	OH	45860		0	: 0	☐	☐
3							0	0	☐	☐

X: ☐ TTO LISTER: HK DATE: 06/17/2020 TIME: 12:00:00 AM ☐ LETTER ☐ LETTER REC'D GIS CODE

STREET/ROAD	TOPOGRAPHY	PU-UTILITIES-PR	NEIGHBORHOOD	INFLUENCE FACTORS	
■ PAVED	■ LEVEL	☐ WATER ☐	☐ IMPROVING	☐ A. NO ROAD	☐ F. RESTRICT
☐ GRAVEL	☐ HIGH	☐ SEWER ☐	☐ STATIC	☐ B. TOPGRHY	☐ G. WOOD LT
☐ DIRT	☐ LOW	☐ GAS ☐	☐ DECLINING	☐ C. Ex Front	☐ H. VACANCY
☐ SIDEWALKS	☐ ROLLING	☐ ELECTRIC ☐	☐ OLD	☐ D. QUANTITY	☐ I. WATER FRONT
☐ CURBS	☐ STANDARD	■ STANDARD	☐ STANDARD	☐ E. SZ/SHAPE	☐ J. OTHER/CDU

PROPERTY LOCATION
1773 STELZER RD, MARIA STEIN

COMMENT
TY2022:Net Gen=$2,598.94, Other Assessment=$0.00
DE17 RMV MLK HSE, ADD SHED/RVL DSKTP REV
DE15 RMV MLK HSE, COR YEAR BLT PER DATA MAILER/TTO
DE20 VERIFED OUTBLDGS; ADD SHED

LAND COMPUTATIONS

LAND TYPE	SIZE	M RATE C	INF	M VALUE C
CR:Crop Land TOTAL	**A 29.4890 (0.9200)**	**10,950 2,270**		**350,100 80,780**
0087 CY22	A 12.4900 (0.9200)	12,450 3,560		166,950 44,670
0072	A .6500	10,350 1,750		6,730 1,140
0022	A 11.3440	11,250 2,540		127,620 28,810
0097	A 5.0050	9,750 1,230		48,800 6,160
HS:Home Site	A 1.0000	30,900 30,900		30,900 30,900
RD:Road	A 2.9410	0 0		0 0
Total Acres: 34.3500 (Conservation:0.9200 @ 230)			TOTAL	381,000 111,680

VALUATION SUMMARY

VALUE YEAR		2023	2023	2022	2022	2020	2020	2020	2020
REASON FOR CHANGE		CAUV	RAPP	CAUV	MISC	CAUV	RAPP	CAUV	NC
APPRAISED VALUE	LAND	111,680	381,000	56,170	336,300	57,820	336,300	84,660	333,200
	IMPR	217,700	217,700	127,500	127,500	127,500	127,500	121,800	121,800
	TOTAL	329,380	598,700	183,670	463,800	185,320	463,800	206,460	455,000
ASSESSED VALUE	LAND	39,090	133,350	19,660	117,710	20,240	117,710	29,630	116,620
	IMPR	76,200	76,200	44,630	44,630	44,630	44,630	42,630	42,630
	TOTAL	115,290	209,550	64,290	162,340	64,870	162,340	72,260	159,250
POTENTIAL RECOUP		2022=4018.45, 2021=4059.93, 2020=4053.07: Total=12131.45							

OCCUPANCY	EXTERIOR
■ SF ☐ DU ☐ TR	■ WOOD
☐ CONVERSION	☐ STUCCO
BUILDING TYPE	☐ ALM/VYNL
☐ MOBILE HOME	☐ CONC BLK
☐ BI/TR LEVEL	☐ METAL
☐ MOD/MAN	☐ BRICK
☐ _____	☐ STONE

ROOFING	ROOF TYPE
☐ METAL	■ GABLE
☐ SLT/TLE	☐ HIP
■ SHINGLES	☐ GAMBREL
☐ SHAKES	☐ MANSARD
☐ COMPOSITE	☐ FLAT

FLOORS	B	1	2	3	U
CONCRETE	■	☐	☐	☐	☐
WOOD	☐	☐	☐	☐	☐
TILE/COMPO	☐	☐	☐	☐	☐
CARPET	☐	■	■	☐	☐

INT. FINISH	B	1	2	3	U
PLASTER/DW	☐	■	■	☐	☐
PANELING	☐	☐	☐	☐	☐
UNFINISHED	☐	☐	☐	☐	☐

ACCOMMODATIONS					
# OF ROOMS		4	3		
BEDROOMS		1	3		
FIREPLACES					

HEAT & AC	B	1	2	3	U
NO HEAT	☐	☐	☐	☐	☐
CTRL HEAT	■	■	■	☐	☐
HW/STEAM	☐	☐	☐	☐	☐
ELECTRIC	☐	☐	☐	☐	☐
HEAT PUMP	☐	☐	☐	☐	☐
FLR/WALL	☐	☐	☐	☐	☐
STVE/SPCE	☐	☐	☐	☐	☐
GEOTHERMAL	☐	☐	☐	☐	☐
OUTSIDE	☐	☐	☐	☐	☐
CTRL A/C	☐	☐	☐	☐	☐

PLUMBING	BASE ■				
X FULL BATH					
X HALF BATH					
X FIXTURES					

FLOOR	AREA	CONST	VALUE
1	1008	FR	159,910
.5	336	FR	33,060
BSMT	336		4,800
SUBTOTAL			197,770
MULTI-FAMILY #		0	0
BUILDING TYPE		100%	0
BSMT FINISH		0 S.F.	0
FIREPLACE #		0	0
HEATING		0 S.F.	0
AIR COND		0 S.F.	0
PLUMBING #		0	0
GARAGES & CARPORTS			19,000
EXTRA FEATURES			5,300
SUBTOTAL			222,070
GRADE FACTOR			100 %
UNADJUSTED VALUE			222,070
FACTOR			100 %

SKETCH

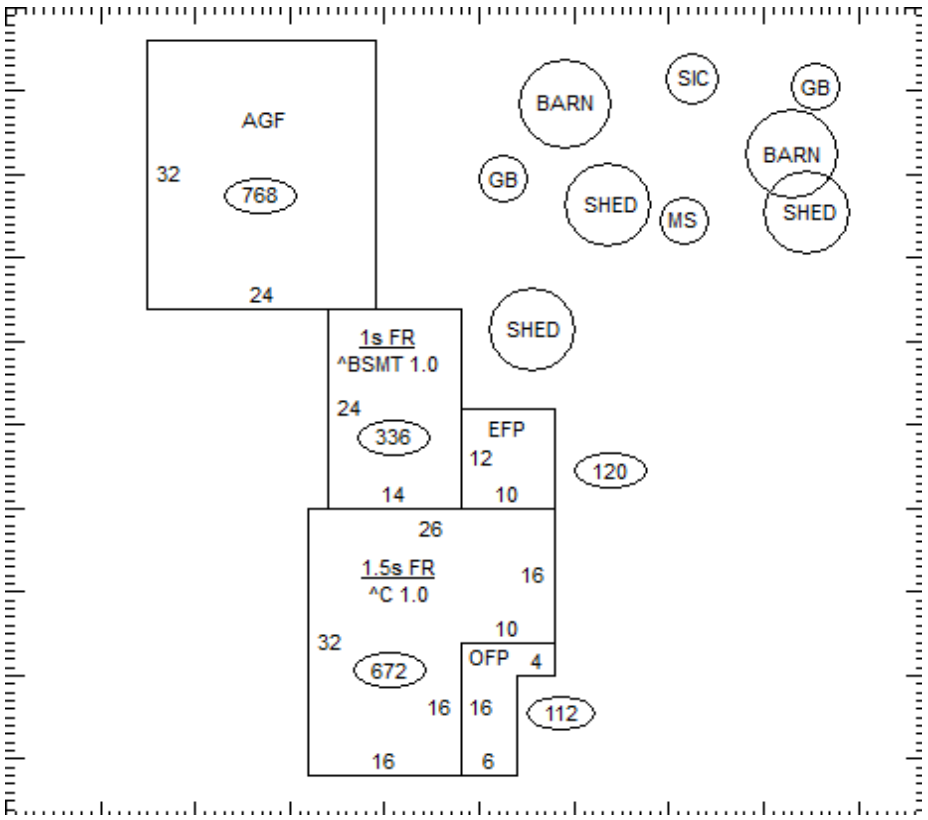

OCCUPANCY	ST.HT	SIZE	AREA	GRADE	PRICE	AGE	REMD	CND	UNADJ VAL	PHYS	PHYS VAL	FUNC	TRUE VAL
DWELLING	1.5	SK	1,344	C		1900		A	222,070	45	122,140		164,900
1 Shed	14	28x66	1,848	C	4.40	1961		A	8,130	90	810		800
2 Shed	7	10x24	240	C	7.70	1960		A	1,850	90	190		200
3 Silo - Concrete	70	70x18	1,260	C	750.00	1989		A	750		750		800
4 Grain Bin		22x27	594	C		2008		A		25			0
5 Barn		28x48	1,344	C	12.00	2009		A	16,130	23	12,420		12,400
6 Grain Bin	15	15x18	270	C		2000		A		37			0
7 Machine Shed	16	40x72	2,880	D	8.92	2012		A	25,690	18	21,070		21,100
8 Shed		0x0	1,144	C	5.50	1970		A	6,290	85	940		900
9 Barn	12	36x40	1,440	C	12.00	2019		A	17,280	4	16,590		16,600
10													
11													
											TOTAL		217,700

31-076100.0000

COMMENTS

Dwelling has an Economic Factor of 135% (Rollback Basis=$195,800)

31-076100.0000

BRUNS GREG M & TOBE ALYSSA A
BRUNS GREG M & TOBE ALYSSA A
705 E MAIN ST
COLDWATER, OH 45828

MARION TWP / MARION SD

LEGAL INFORMATION
W SD SW NW

RTS: 003-07-30
Acres:34.3500

12-30-100-004

QUALIFIED CREDITS: CAUV: 07117: 2023

Property Class: 111
Neighborhood 009311-A140
Map: 21
Block:
Card: 20
Bk: Pg:

	OWNERSHIP	ADDRESS	CITY	STATE	ZIP	DATE	AMOUNT	DEED:CONV#	JS	VALID
1	BRUNS GREG M & TOBE	705 E MAIN ST	COLDWATER	OH	45828	12/30/2022	379,500	WDC : 913	☐	■
2	DIPPOLD GARY	1773 STELZER RD	MARIA STEIN	OH	45860		0	: 0	☐	☐
3							0	0	☐	☐

X: ☐ TTO LISTER: HK DATE: 06/17/2020 TIME: 12:00:00 AM ☐ LETTER ☐ LETTER REC'D GIS CODE

STREET/ROAD	TOPOGRAPHY	PU-UTILITIES-PR	NEIGHBORHOOD	INFLUENCE FACTORS	
■ PAVED	■ LEVEL	☐ WATER ☐	☐ IMPROVING	☐ A. NO ROAD	☐ F. RESTRICT
☐ GRAVEL	☐ HIGH	☐ SEWER ☐	☐ STATIC	☐ B. TOPGRHY	☐ G. WOOD LT
☐ DIRT	☐ LOW	☐ GAS ☐	☐ DECLINING	☐ C. Ex Front	☐ H. VACANCY
☐ SIDEWALKS	☐ ROLLING	☐ ELECTRIC ☐	☐ OLD	☐ D. QUANTITY	☐ I. WATER FRONT
☐ CURBS	☐ STANDARD	■ STANDARD	☐ STANDARD	☐ E. SZ/SHAPE	☐ J. OTHER/CDU

PROPERTY LOCATION
1773 STELZER RD, MARIA STEIN

COMMENT

LAND COMPUTATIONS

LAND TYPE	SIZE	M RATE C	INF	M VALUE C
Total Acres: 34.3500 (Conservation:0.9200 @ 230)			TOTAL	381,000 111,680

VALUATION SUMMARY

VALUE YEAR		2017	2017	2017	2017				
REASON FOR CHANGE		CAUV	RAPP	CAUV	MISC				
APPRAISED VALUE	LAND	84,660	333,200	107,110	258,620				
	IMPR	110,500	110,500	120,700	120,700				
	TOTAL	195,160	443,700	227,810	379,320				
ASSESSED VALUE	LAND	29,630	116,620	37,490	90,520				
	IMPR	38,680	38,680	42,250	42,250				
	TOTAL	68,310	155,300	79,740	132,770				
POTENTIAL RECOUP		2022=4018.45, 2021=4059.93, 2020=4053.07: Total=12131.45							

OCCUPANCY	EXTERIOR
☐SF ☐DU ☐TR	☐ WOOD
☐CONVERSION	☐ STUCCO
BUILDING TYPE	☐ ALM/VYNL
☐ MOBILE HOME	☐ CONC BLK
☐ BI/TR LEVEL	☐ METAL
☐ MOD/MAN	☐ BRICK
☐ _____	☐ STONE

ROOFING	ROOF TYPE
☐ METAL	☐ GABLE
☐ SLT/TLE	☐ HIP
☐ SHINGLES	☐ GAMBREL
☐ SHAKES	☐ MANSARD
☐ COMPOSITE	☐ FLAT

FLOORS	B	1	2	3	U
CONCRETE	☐	☐	☐	☐	☐
WOOD	☐	☐	☐	☐	☐
TILE/COMPO	☐	☐	☐	☐	☐
CARPET	☐	☐	☐	☐	☐

INT. FINISH	B	1	2	3	U
PLASTER/DW	☐	☐	☐	☐	☐
PANELING	☐	☐	☐	☐	☐
UNFINISHED	☐	☐	☐	☐	☐

ACCOMMODATIONS					
# OF ROOMS					
BEDROOMS					
FIREPLACES					

HEAT & AC	B	1	2	3	U
NO HEAT	☐	☐	☐	☐	☐
CTRL HEAT	☐	☐	☐	☐	☐
HW/STEAM	☐	☐	☐	☐	☐
ELECTRIC	☐	☐	☐	☐	☐
HEAT PUMP	☐	☐	☐	☐	☐
FLR/WALL	☐	☐	☐	☐	☐
STVE/SPCE	☐	☐	☐	☐	☐
GEOTHERMAL	☐	☐	☐	☐	☐
OUTSIDE	☐	☐	☐	☐	☐
CTRL A/C	☐	☐	☐	☐	☐

PLUMBING	BASE ☐				
X FULL BATH					
X HALF BATH					
X FIXTURES					

FLOOR	AREA	CONST	VALUE

SUBTOTAL		0
MULTI-FAMILY #	0	0
BUILDING TYPE	000%	0
BSMT FINISH	0 S.F.	0
FIREPLACE #	0	0
HEATING	0 S.F.	0
AIR COND	0 S.F.	0
PLUMBING #	0	0
GARAGES & CARPORTS		0
EXTRA FEATURES		0
SUBTOTAL		0
GRADE FACTOR		%
UNADJUSTED VALUE		0
FACTOR		%

SKETCH

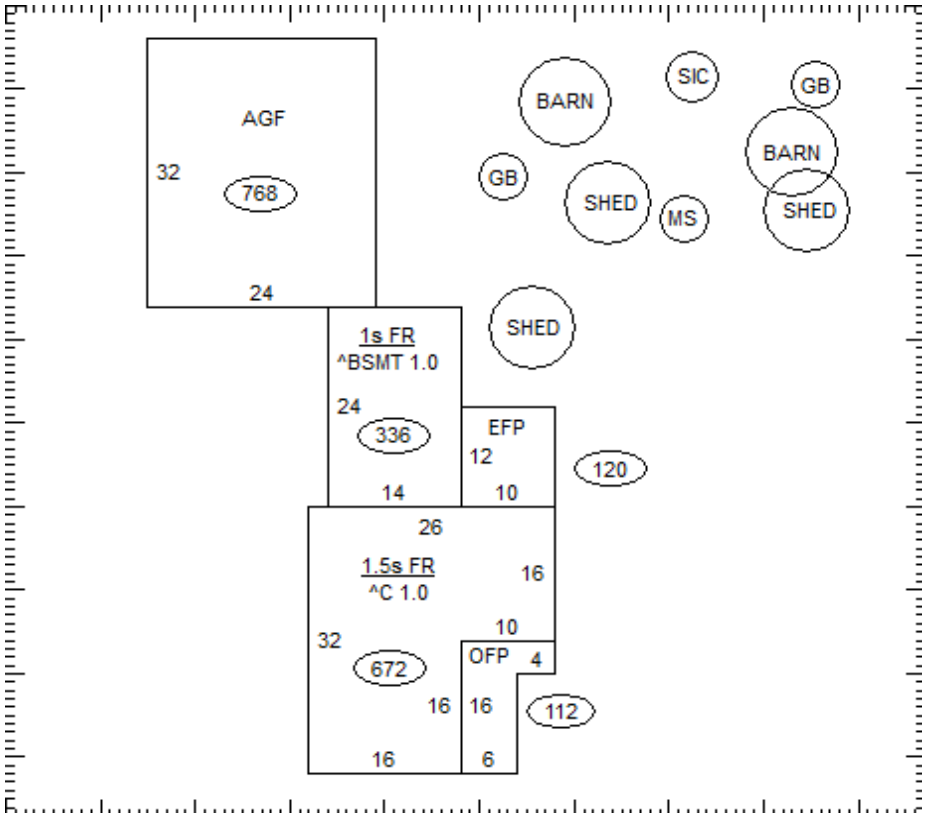

OCCUPANCY	ST.HT	SIZE	AREA	GRADE	PRICE	AGE	REMD	CND	UNADJ VAL	PHYS	PHYS VAL	FUNC	TRUE VAL
DWELLING		SK											
1													
2													
3													
4													
5													
6													
7													
8													
9													
10													
11													
												TOTAL	0

31-076100.0000

COMMENTS