31-072900.0000

MARION TWP / MARION SD

12-30-227-002

Property Class: 510

Neighborhood 003195-RS50

Map: 21
Block:
Card: 47
Bk: Pg:

CESARONI PAXTON E & DANIELLE M
CESARONI PAXTON E & DANIELLE M
1965 CASSELLA MONTEZUMA RD
MARIA STEIN, OH 45860

LEGAL INFORMATION
MARYSVILLE TOWN LOTS
ALSO LOT 6
RTS: 003-07-30 LOT#: 7

	OWNERSHIP	ADDRESS	CITY	STATE	ZIP	DATE	AMOUNT	DEED:CONV#	JS	VALID
1	CESARONI PAXTON E &	1965 CASSELLA	MARIA STEIN	OH	45860	06/07/2023	265,000	WDC : 317	☐	■
2	BERNING DAVID U & MONA	1965 CASSELLA	MARIA STEIN	OH	45860	07/28/1992	0	: X : 0	☐	☐
3							0	0	☐	☐

X: ☐ TTO LISTER: DATE: 11/18/2010 TIME: 12:00:00 AM ☐ LETTER ☐ LETTER REC'D GIS CODE

STREET/ROAD	TOPOGRAPHY	PU-UTILITIES-PR	NEIGHBORHOOD	INFLUENCE FACTORS	
■ PAVED	■ LEVEL	☐ WATER ☐	☐ IMPROVING	☐ A. NO ROAD	☐ F. RESTRICT
☐ GRAVEL	☐ HIGH	☐ SEWER ☐	☐ STATIC	☐ B. TOPGRHY	☐ G. WOOD LT
☐ DIRT	☐ LOW	☐ GAS ☐	☐ DECLINING	☐ C. Ex Front	☐ H. VACANCY
☐ SIDEWALKS	☐ ROLLING	☐ ELECTRIC ☐	☐ OLD	☐ D. QUANTITY	☐ I. WATER FRONT
☐ CURBS	☐ STANDARD	■ STANDARD	☐ STANDARD	☐ E. SZ/SHAPE	☐ J. OTHER/CDU

PROPERTY LOCATION
1965 CASSELLA MONTEZUMA RD, MARIA STEIN

COMMENT
TY2022:Net Gen=$2,580.50, Other Assessment=$0.00
DE17 DESKTOP RVW CHG: COR EX FEATURES, ADD CARPORT
DE11 ADD PAT
DE09 EST ADDNT COMPL
DE09 PER DATA MAILER CORRECTED PLMG
DE22 ADDED LOTS TOGETHER//DWELLING SITS ON BOTH

LAND COMPUTATIONS

LAND TYPE	SIZE	M RATE C	INF	M VALUE C
F:Front	F132 D264	ST185 DP118 ADJ218		28,800 0
			TOTAL	28,800 0

VALUATION SUMMARY

VALUE YEAR		2023	2022	2020	2017	2017			
REASON FOR CHANGE		RAPP	MISC	RAPP	RAPP	MISC			
APPRAISED VALUE	LAND	28,800	25,300	12,600	9,800	9,800			
	IMPR	220,000	159,000	159,000	111,900	96,400			
	TOTAL	248,800	184,300	171,600	121,700	106,200			
ASSESSED VALUE	LAND	10,080	8,860	4,410	3,430	3,430			
	IMPR	77,000	55,650	55,650	39,170	33,740			
	TOTAL	87,080	64,510	60,060	42,600	37,170			

OCCUPANCY	EXTERIOR
■SF ☐DU ☐TR	☐ WOOD
☐CONVERSION	☐ STUCCO
BUILDING TYPE	■ ALM/VYNL
☐ MOBILE HOME	☐ CONC BLK
☐ BI/TR LEVEL	☐ METAL
☐ MOD/MAN	☐ BRICK
☐ _____	☐ STONE

ROOFING	ROOF TYPE
☐ METAL	■ GABLE
☐ SLT/TLE	☐ HIP
■ SHINGLES	☐ GAMBREL
☐ SHAKES	☐ MANSARD
☐ COMPOSITE	☐ FLAT

FLOORS	B	1	2	3	U
CONCRETE	■	☐	☐	☐	☐
WOOD	☐	☐	☐	☐	☐
TILE/COMPO	☐	☐	☐	☐	☐
CARPET	☐	■	■	☐	☐

INT. FINISH	B	1	2	3	U
PLASTER/DW	☐	■	■	☐	☐
PANELING	☐	☐	☐	☐	☐
UNFINISHED	■	☐	☐	☐	☐

ACCOMMODATIONS					
# OF ROOMS		7	2		
BEDROOMS		2	2		
FIREPLACES					

HEAT & AC	B	1	2	3	U
NO HEAT	☐	☐	☐	☐	☐
CTRL HEAT	☐	■	■	☐	☐
HW/STEAM	☐	■	■	☐	☐
ELECTRIC	☐	☐	☐	☐	☐
HEAT PUMP	☐	☐	☐	☐	☐
FLR/WALL	☐	☐	☐	☐	☐
STVE/SPCE	☐	☐	☐	☐	☐
GEOTHERMAL	☐	☐	☐	☐	☐
OUTSIDE	☐	☐	☐	☐	☐
CTRL A/C	☐	☐	☐	☐	☐

PLUMBING					BASE ■
X FULL BATH		1			
X HALF BATH					
X FIXTURES					

FLOOR	AREA	CONST	VALUE
1	1952	FR	230,490
.5	448	FR	32,800
BSMT	224		3,200
SUBTOTAL			266,490
MULTI-FAMILY #		0	0
BUILDING TYPE		100%	0
BSMT FINISH		0 S.F.	0
FIREPLACE #		0	0
HEATING		0 S.F.	0
AIR COND		0 S.F.	0
PLUMBING #		3	3,630
GARAGES & CARPORTS			22,100
EXTRA FEATURES			3,100
SUBTOTAL			295,320
GRADE FACTOR			100 %
UNADJUSTED VALUE			295,320
FACTOR			100 %

SKETCH

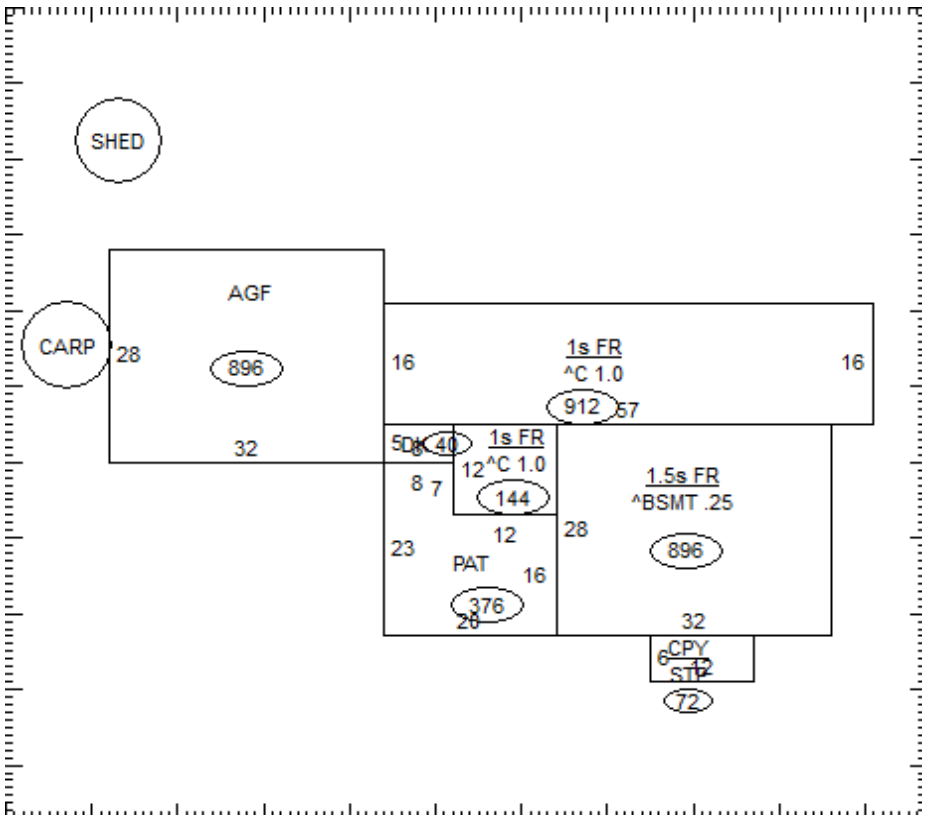

OCCUPANCY	ST.HT	SIZE	AREA	GRADE	PRICE	AGE	REMD	CND	UNADJ VAL	PHYS	PHYS VAL	FUNC	TRUE VAL
DWELLING	1.5	SK	2,400	C		1937	2008	A	295,320	26	218,540		218,500
1 Shed	6	9x19	171	C	9.90	1970		A	1,690	85	250		300
2 Carport		12x20	240	C	11.88	1990		A	2,850	57	1,230		1,200
3													
4													
5													
6													
7													
8													
9													
10													
11													
											TOTAL		220,000

31-072900.0000

COMMENTS

Dwelling has an Economic Factor of 100% (Rollback Basis=$247,300)