31-056800.0614

MARION TWP / MARION SD

12-26-100-054

Property Class: 510

Neighborhood 003169-RS50

Map:
Block:
Card:
Bk: Pg:

LIETTE DANIEL & VICTORIA
LIETTE DANIEL & VICTORIA
1818 WASHINGTON AVE
MARIA STEIN, OH 45860
Created in 2018 From 31-056800.0200 due to Split

LEGAL INFORMATION
MARION ACRES SUBDIVISION
PHASE 2
LOT#: 14

	OWNERSHIP	ADDRESS	CITY	STATE	ZIP	DATE	AMOUNT	DEED:CONV#	JS	VALID
1	LIETTE DANIEL & VICTORIA	1818 WASHINGTON AVE	MARIA STEIN	OH	45860	09/16/2021	42,900	WDC : 787	☐	■
2	MARIA STEIN DEVELOPMENT	1429 CRANBERRY RD	ST HENRY	OH	45883	11/21/2001	0	: A : 0	☐	☐
3							0	0	☐	☐

X: ■ TTO LISTER: TK DATE: 07/11/2023 TIME: 12:00:00 AM ☐ LETTER ☐ LETTER REC'D GIS CODE

STREET/ROAD	TOPOGRAPHY	PU-UTILITIES-PR	NEIGHBORHOOD	INFLUENCE FACTORS	
■ PAVED	■ LEVEL	☐ WATER ☐	☐ IMPROVING	☐ A. NO ROAD	☐ F. RESTRICT
☐ GRAVEL	☐ HIGH	☐ SEWER ☐	☐ STATIC	☐ B. TOPGRHY	☐ G. WOOD LT
☐ DIRT	☐ LOW	☐ GAS ☐	☐ DECLINING	☐ C. Ex Front	☐ H. VACANCY
☐ SIDEWALKS	☐ ROLLING	☐ ELECTRIC ☐	☐ OLD	☐ D. QUANTITY	☐ I. WATER FRONT
☐ CURBS	☐ STANDARD	■ STANDARD	☐ STANDARD	☐ E. SZ/SHAPE	☐ J. OTHER/CDU

PROPERTY LOCATION
1818 WASHINGTON AVE

COMMENT
TY2022:Net Gen=$549.60, Other Assessment=$2.00
DE23 TTO; ADD DWLG

LAND COMPUTATIONS

LAND TYPE	SIZE	M RATE C	INF	M VALUE C
F:Front	F167 D142	ST420 DP97 ADJ407		68,000 0
			TOTAL	68,000 0

VALUATION SUMMARY

VALUE YEAR		2023	2023	2020	2019				
REASON FOR CHANGE		RCLS	NC	RAPP	MISC				
APPRAISED VALUE	LAND	68,000	68,000	38,300	16,200				
	IMPR	528,600	528,600	0	0				
	TOTAL	596,600	596,600	38,300	16,200				
ASSESSED VALUE	LAND	23,800	23,800	13,410	5,670				
	IMPR	185,010	185,010	0	0				
	TOTAL	208,810	208,810	13,410	5,670				

OCCUPANCY	EXTERIOR
■ SF ☐ DU ☐ TR	☐ WOOD
☐ CONVERSION	☐ STUCCO
BUILDING TYPE	■ ALM/VYNL
☐ MOBILE HOME	☐ CONC BLK
☐ BI/TR LEVEL	☐ METAL
☐ MOD/MAN	☐ BRICK
☐ _____	■ STONE

ROOFING	ROOF TYPE
☐ METAL	☐ GABLE
☐ SLT/TLE	■ HIP
■ SHINGLES	☐ GAMBREL
☐ SHAKES	☐ MANSARD
☐ COMPOSITE	☐ FLAT

FLOORS	B	1	2	3	U
CONCRETE	☐	☐	☐	☐	☐
WOOD	☐	☐	☐	☐	☐
TILE/COMPO	☐	■	☐	☐	☐
CARPET	☐	■	☐	☐	☐

INT. FINISH	B	1	2	3	U
PLASTER/DW	☐	■	☐	☐	☐
PANELING	☐	☐	☐	☐	☐
UNFINISHED	☐	☐	☐	☐	☐

ACCOMMODATIONS					
# OF ROOMS		5			
BEDROOMS		3			
FIREPLACES		1			

HEAT & AC	B	1	2	3	U
NO HEAT	☐	☐	☐	☐	☐
CTRL HEAT	☐	■	☐	☐	☐
HW/STEAM	☐	☐	☐	☐	☐
ELECTRIC	☐	☐	☐	☐	☐
HEAT PUMP	☐	☐	☐	☐	☐
FLR/WALL	☐	☐	☐	☐	☐
STVE/SPCE	☐	☐	☐	☐	☐
GEOTHERMAL	☐	☐	☐	☐	☐
OUTSIDE	☐	☐	☐	☐	☐
CTRL A/C	☐	■	☐	☐	☐

PLUMBING					BASE ■
X FULL BATH		1			
X HALF BATH		1			
X FIXTURES		2			

FLOOR	AREA	CONST	VALUE
1	2643	FR	283,620
BSMT	2643		37,790
SUBTOTAL			321,410
MULTI-FAMILY #	0		0
BUILDING TYPE	100%		0
BSMT FINISH	0 S.F.		0
FIREPLACE #	1		4,400
HEATING	0 S.F.		0
AIR COND	2,643 S.F.		4,360
PLUMBING #	7		8,470
GARAGES & CARPORTS			35,300
EXTRA FEATURES			13,000
SUBTOTAL			386,940
GRADE FACTOR			120 %
UNADJUSTED VALUE			464,330
FACTOR			100 %

SKETCH

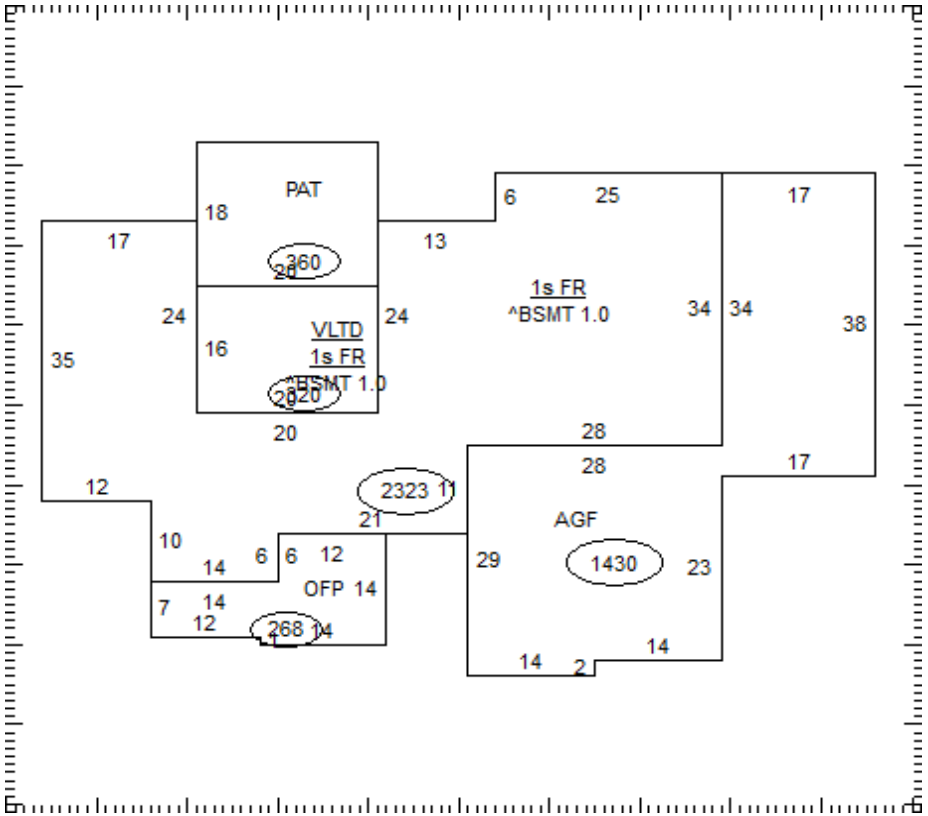

OCCUPANCY	ST.HT	SIZE	AREA	GRADE	PRICE	AGE	REMD	CND	UNADJ VAL	PHYS	PHYS VAL	FUNC	TRUE VAL
DWELLING	1	SK	2,643	B		2022		G	464,330	1	459,690		528,600
1													
2													
3													
4													
5													
6													
7													
8													
9													
10													
11													
											TOTAL		528,600

31-056800.0614

COMMENTS

Dwelling has an Economic Factor of 115%