30-017200.0201

LIBERTY TWP / PARKWAY SD

04-08-300-004

Property Class: 510

Neighborhood 009305-R150

Map:
Block:
Card:
Bk: Pg:

BERRY RICKY L
BERRY RICKY L
9180 ST RT 49
CELINA, OH 45822

LEGAL INFORMATION
E SD SW

RTS: 001-05-08
Acres:1.5000

	OWNERSHIP	ADDRESS	CITY	STATE	ZIP	DATE	AMOUNT	DEED:CONV#	JS	VALID
1	BERRY RICKY L	9180 ST RT 49	CELINA	OH	45822	10/29/1996	38,000	: A : 0	☐	■
2							0	0	☐	☐
3							0	0	☐	☐

X: ☐ TTO LISTER: TM DATE: 06/28/2004 TIME: 09:42:53 AM ☐ LETTER ■ LETTER REC'D GIS CODE Minor Sub

STREET/ROAD	TOPOGRAPHY	PU-UTILITIES-PR	NEIGHBORHOOD	INFLUENCE FACTORS	
■ PAVED	■ LEVEL	☐ WATER ☐	☐ IMPROVING	☐ A. NO ROAD	☐ F. RESTRICT
☐ GRAVEL	☐ HIGH	☐ SEWER ☐	■ STATIC	☐ B. TOPGRHY	☐ G. WOOD LT
☐ DIRT	☐ LOW	☐ GAS ☐	☐ DECLINING	☐ C. Ex Front	☐ H. VACANCY
☐ SIDEWALKS	☐ ROLLING	☐ ELECTRIC ☐	☐ OLD	☐ D. QUANTITY	☐ I. WATER FRONT
☐ CURBS	☐ STANDARD	■ STANDARD	☐ STANDARD	☐ E. SZ/SHAPE	☐ J. OTHER/CDU

PROPERTY LOCATION
9180 ST RT 49, CELINA

COMMENT
TY2022:Net Gen=$1,128.30, Other Assessment=$2.00
DE15 RMV GB VALUE PER ODT
DE19 DATA CORR; ADD YR BLT ON RFX
DE22 DESKTOP RVW; RMV SEV'L OUTBDGS

LAND COMPUTATIONS

LAND TYPE	SIZE	M RATE C	INF	M VALUE C
HS:Home Site	AC:1	23390		23,400 0
SM:Small Acreage	AC:0.5	8500		4,300 0
Total Acres: 1.5000			TOTAL	27,700 0

VALUATION SUMMARY

		2023	2022	2020	2019	2017			
VALUE YEAR		2023	2022	2020	2019	2017			
REASON FOR CHANGE		RAPP	REMB	RAPP	MISC	RAPP			
APPRAISED VALUE	LAND	27,700	23,400	23,400	20,000	20,000			
	IMPR	93,400	51,400	52,400	44,800	44,700			
	TOTAL	121,100	74,800	75,800	64,800	64,700			
ASSESSED VALUE	LAND	9,700	8,190	8,190	7,000	7,000			
	IMPR	32,690	17,990	18,340	15,680	15,650			
	TOTAL	42,390	26,180	26,530	22,680	22,650			

OCCUPANCY	EXTERIOR
■SF ☐DU ☐TR	☐ WOOD
☐CONVERSION	☐ STUCCO
BUILDING TYPE	■ ALM/VYNL
☐ MOBILE HOME	☐ CONC BLK
☐ BI/TR LEVEL	☐ METAL
☐ MOD/MAN	☐ BRICK
☐ _____	☐ STONE

ROOFING	ROOF TYPE
☐ METAL	☐ GABLE
☐ SLT/TLE	☐ HIP
■ SHINGLES	☐ GAMBREL
☐ SHAKES	☐ MANSARD
☐ COMPOSITE	☐ FLAT

FLOORS	B	1	2	3	U
CONCRETE	■	☐	☐	☐	☐
WOOD	☐	■	■	☐	☐
TILE/COMPO	☐	☐	☐	☐	☐
CARPET	☐	☐	☐	☐	☐

INT. FINISH	B	1	2	3	U
PLASTER/DW	☐	■	■	☐	☐
PANELING	☐	■	☐	☐	☐
UNFINISHED	■	☐	☐	☐	☐

ACCOMMODATIONS					
# OF ROOMS		5	3		
BEDROOMS		1	3		
FIREPLACES					

HEAT & AC	B	1	2	3	U
NO HEAT	☐	☐	☐	☐	☐
CTRL HEAT	☐	■	■	☐	☐
HW/STEAM	☐	☐	☐	☐	☐
ELECTRIC	☐	☐	☐	☐	☐
HEAT PUMP	☐	☐	☐	☐	☐
FLR/WALL	☐	☐	☐	☐	☐
STVE/SPCE	☐	☐	☐	☐	☐
GEOTHERMAL	☐	☐	☐	☐	☐
OUTSIDE	☐	☐	☐	☐	☐
CTRL A/C	☐	☐	☐	☐	☐

PLUMBING					BASE ■
X FULL BATH					
X HALF BATH					
X FIXTURES		2			

FLOOR	AREA	CONST	VALUE
1	1178	FR	177,490
.5	376	FR	35,130
BSMT	752		10,750

SUBTOTAL		223,370
MULTI-FAMILY #	0	0
BUILDING TYPE	100%	0
BSMT FINISH	0 S.F.	0
FIREPLACE #	0	0
HEATING	0 S.F.	0
AIR COND	0 S.F.	0
PLUMBING #	2	2,420
GARAGES & CARPORTS		0
EXTRA FEATURES		6,900
SUBTOTAL		232,690
GRADE FACTOR		80 %
UNADJUSTED VALUE		186,150
FACTOR		100 %

SKETCH

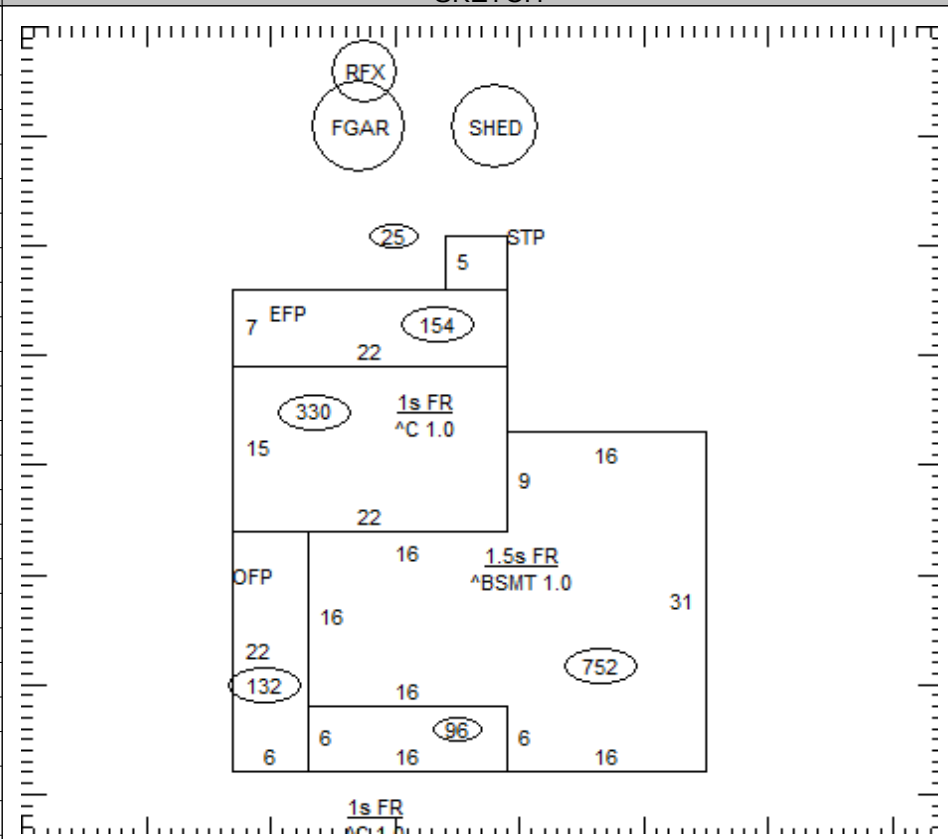

OCCUPANCY	ST.HT	SIZE	AREA	GRADE	PRICE	AGE	REMD	CND	UNADJ VAL	PHYS	PHYS VAL	FUNC	TRUE VAL
DWELLING	1.5	SK	1,554	D		1910		A	186,150	50	93,080		93,100
1 Gar - Frame		12x21	252	C	23.70	1910		F	5,970	95	300		300
2 Rfx		12x5	60	C	8.91	1950		F	530	95	30		0
3 Shed		6x10	60	C		2021		A		2			0
4													
5													
6													
7													
8													
9													
10													
11													

30-017200.0201

TOTAL 93,400

COMMENTS

#7 USED FOR HOGS
Dwelling has an Economic Factor of 100% (Rollback Basis=$116,800)