28-016700.0000

LIBERTY TWP / CELINA SD

04-36-100-004

Property Class: 510

Neighborhood 009285-R150

Map:
Block:
Card:
Bk: Pg:

ULREY CHARLES R & BARBARA A
ULREY CHARLES R & BARBARA A
2521 MUD PIKE
CELINA, OH 45822

LEGAL INFORMATION
OUT SW NW

RTS: 001-05-36
Acres:5.0000

	OWNERSHIP	ADDRESS	CITY	STATE	ZIP	DATE	AMOUNT	DEED:CONV#	JS	VALID
1	ULREY CHARLES R &	2521 MUD PIKE	CELINA	OH	45822	06/16/2020	288,000	WDC : 370	☐	■
2	GILLIS PROPERTIES LLC	3939 NATURES LN	COLDWATER	OH	45828	12/06/2018	80,000	2:WDC : 947	☐	☐
3	FICKERT LLOYD R JR & ROBIN	2521 MUD PIKE	CELINA	OH	45822		0	: 0	☐	☐

X: ☐ TTO LISTER: HK DATE: 06/17/2020 TIME: 12:00:00 AM ☐ LETTER ☐ LETTER REC'D GIS CODE

STREET/ROAD	TOPOGRAPHY	PU-UTILITIES-PR	NEIGHBORHOOD	INFLUENCE FACTORS	
■ PAVED	■ LEVEL	☐ WATER ☐	☐ IMPROVING	☐ A. NO ROAD	☐ F. RESTRICT
☐ GRAVEL	☐ HIGH	☐ SEWER ☐	☐ STATIC	☐ B. TOPGRHY	☐ G. WOOD LT
☐ DIRT	☐ LOW	☐ GAS ☐	☐ DECLINING	☐ C. Ex Front	☐ H. VACANCY
☐ SIDEWALKS	☐ ROLLING	☐ ELECTRIC ☐	☐ OLD	☐ D. QUANTITY	☐ I. WATER FRONT
☐ CURBS	☐ STANDARD	■ STANDARD	☐ STANDARD	☐ E. SZ/SHAPE	☐ J. OTHER/CDU

PROPERTY LOCATION
2521 MUD PIKE, CELINA

COMMENT
TY2022:Net Gen=$3,744.34, Other Assessment=$2.64
DE16 DESKTOP RVW CHG: cpy, rmv hg bld
DE20 MAJOR REMODEL W/ REAR ADDITION
BOR: 18-19 RECOMMENDATION: HEARING

LAND COMPUTATIONS

LAND TYPE	SIZE	M RATE C	INF	M VALUE C
HS:Home Site	AC:1	22440		22,400 0
SM:Small Acreage	AC:4	7900		31,600 0
Total Acres: 5.0000			TOTAL	54,000 0

VALUATION SUMMARY

VALUE YEAR		2023	2020	2020	2017				
REASON FOR CHANGE		RAPP	RAPP	NC	RAPP				
APPRAISED VALUE	LAND	54,000	46,400	42,100	42,100				
	IMPR	226,200	170,600	140,500	87,600				
	TOTAL	280,200	217,000	182,600	129,700				
ASSESSED VALUE	LAND	18,900	16,240	14,740	14,740				
	IMPR	79,170	59,710	49,180	30,660				
	TOTAL	98,070	75,950	63,920	45,400				

OCCUPANCY	EXTERIOR
■ SF ☐ DU ☐ TR	■ WOOD
☐ CONVERSION	☐ STUCCO
BUILDING TYPE	☐ ALM/VYNL
☐ MOBILE HOME	☐ CONC BLK
☐ BI/TR LEVEL	☐ METAL
☐ MOD/MAN	☐ BRICK
☐ _____	☐ STONE

ROOFING	ROOF TYPE
☐ METAL	☐ GABLE
☐ SLT/TLE	■ HIP
■ SHINGLES	☐ GAMBREL
☐ SHAKES	☐ MANSARD
☐ COMPOSITE	☐ FLAT

FLOORS	B	1	2	3	U
CONCRETE	■	☐	☐	☐	☐
WOOD	☐	☐	☐	☐	☐
TILE/COMPO	☐	■	☐	☐	☐
CARPET	☐	■	☐	☐	☐

INT. FINISH	B	1	2	3	U
PLASTER/DW	☐	■	☐	☐	☐
PANELING	☐	☐	☐	☐	☐
UNFINISHED	■	☐	☐	☐	☐

ACCOMMODATIONS					
# OF ROOMS		5			
BEDROOMS		3			
FIREPLACES					

HEAT & AC	B	1	2	3	U
NO HEAT	☐	☐	☐	☐	☐
CTRL HEAT	☐	■	☐	☐	☐
HW/STEAM	☐	☐	☐	☐	☐
ELECTRIC	☐	☐	☐	☐	☐
HEAT PUMP	☐	☐	☐	☐	☐
FLR/WALL	☐	☐	☐	☐	☐
STVE/SPCE	☐	☐	☐	☐	☐
GEOTHERMAL	☐	☐	☐	☐	☐
OUTSIDE	☐	☐	☐	☐	☐
CTRL A/C	☐	■	☐	☐	☐

PLUMBING	BASE ■			
X FULL BATH		1		
X HALF BATH		1		
X FIXTURES				

FLOOR	AREA	CONST	VALUE
1	1848	FR	226,160
BSMT	1848		26,430
SUBTOTAL			252,590
MULTI-FAMILY #	0		0
BUILDING TYPE	100%		0
BSMT FINISH	0 S.F.		0
FIREPLACE #	0		0
HEATING	0 S.F.		0
AIR COND	1,848 S.F.		3,050
PLUMBING #	5		6,050
GARAGES & CARPORTS			14,200
EXTRA FEATURES			4,100
SUBTOTAL			279,990
GRADE FACTOR			100 %
UNADJUSTED VALUE			279,990
FACTOR			100 %

SKETCH

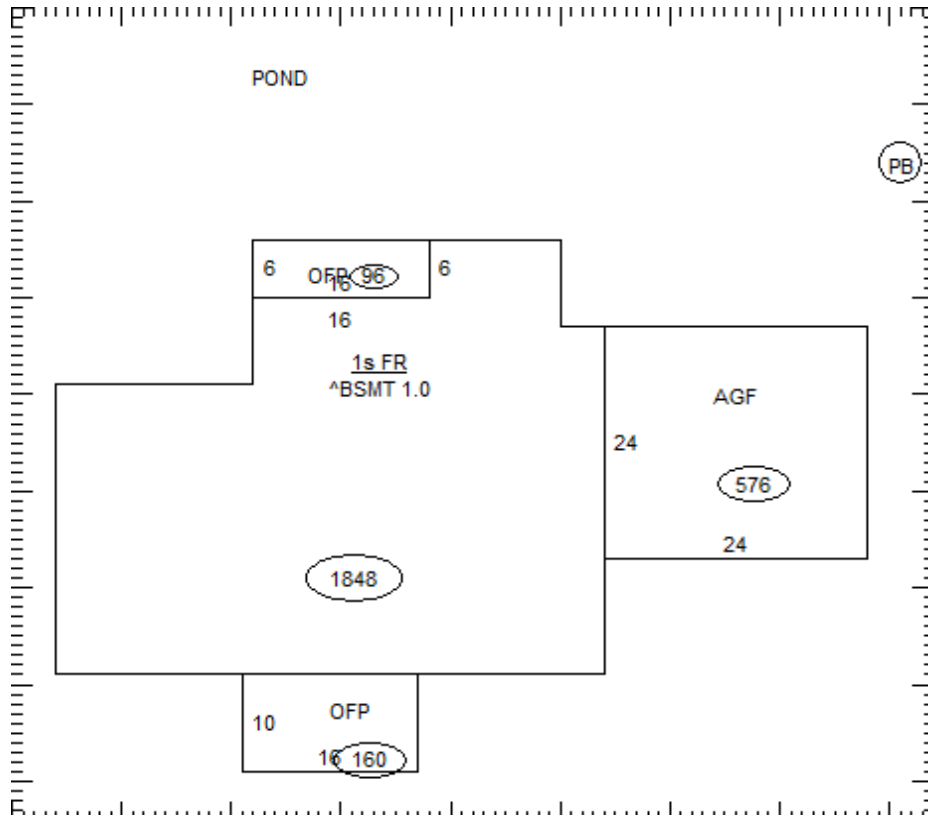

OCCUPANCY	ST.HT	SIZE	AREA	GRADE	PRICE	AGE	REMD	CND	UNADJ VAL	PHYS	PHYS VAL	FUNC	TRUE VAL
DWELLING	1	SK	1,848	C		1969	2019	G	279,990	19	226,790		215,500
1 Pole Bldg		26x45	1,170	C	12.51	2007		A	14,640	27	10,690		10,700
2													
3													
4													
5													
6													
7													
8													
9													
10													
11													
											TOTAL		226,200

28-016700.0000

COMMENTS

Dwelling has an Economic Factor of 95%