27-481500.0000

KHUTH DY & CRISTINA L
KHUTH DY & CRISTINA L
917 FAIRGROUND RD
CELINA, OH 45822

JEFFERSON TWP-CELINA CORP / CELINA SD
05-36-155-009

LEGAL INFORMATION
FARMVIEW ESTATES SUBDIV

LOT#: 20

Property Class: 510
Neighborhood
27502701-03 -
Map: 01
Block:
Card: 31
Bk: Pg:

	OWNERSHIP	ADDRESS	CITY	STATE	ZIP	DATE	AMOUNT	DEED:CONV#	JS	VALID
1	KHUTH DY & CRISTINA L	917 FAIRGROUND RD	CELINA	OH	45822	10/28/2021	310,000	WDC : 917	☐	■
2	EPS ENTERPRISE	917 FAIRGROUND RD	CELINA	OH	45822	03/29/2012	0	QCE : X : 0	☐	☐
3	SUDHOFF ERIC A & PATRICIA	917 FAIRGROUND RD	CELINA	OH	45822	07/29/2003	0	: X : 0	☐	☐

X: ■ TTO LISTER: HK DATE: 03/26/2018 TIME: 12:00:00 AM ☐ LETTER ☐ LETTER REC'D GIS CODE

STREET/ROAD	TOPOGRAPHY	PU-UTILITIES-PR	NEIGHBORHOOD	INFLUENCE FACTORS	
■ PAVED	■ LEVEL	☐ WATER ☐	☐ IMPROVING	☐ A. NO ROAD	☐ F. RESTRICT
☐ GRAVEL	☐ HIGH	☐ SEWER ☐	■ STATIC	☐ B. TOPGRHY	☐ G. WOOD LT
☐ DIRT	☐ LOW	☐ GAS ☐	☐ DECLINING	☐ C. Ex Front	☐ H. VACANCY
☐ SIDEWALKS	☐ ROLLING	☐ ELECTRIC ☐	☐ OLD	☐ D. QUANTITY	☐ I. WATER FRONT
☐ CURBS	☐ STANDARD	■ STANDARD	☐ STANDARD	☐ E. SZ/SHAPE	☐ J. OTHER/CDU

PROPERTY LOCATION
917 FAIRGROUND RD, CELINA

COMMENT
TY2022:Net Gen=$3,101.80, Other Assessment=$0.00
DE10 RV'D IN FIELD-NO CHG
DE18 SHED

LAND COMPUTATIONS

LAND TYPE	SIZE	M RATE C	INF	M VALUE C
F:Front	F102 D170	ST290 DP106 ADJ307		31,300 0
			TOTAL	31,300 0

VALUATION SUMMARY

VALUE YEAR		2023	2020	2018	2017				
REASON FOR CHANGE		RAPP	RAPP	NC	RAPP				
APPRAISED VALUE	LAND	31,300	30,200	27,000	27,000				
	IMPR	225,200	166,000	141,500	139,900				
	TOTAL	256,500	196,200	168,500	166,900				
ASSESSED VALUE	LAND	10,960	10,570	9,450	9,450				
	IMPR	78,820	58,100	49,530	48,970				
	TOTAL	89,780	68,670	58,980	58,420				

OCCUPANCY	EXTERIOR
■ SF ☐ DU ☐ TR	☐ WOOD
☐ CONVERSION	☐ STUCCO
BUILDING TYPE	☐ ALM/VYNL
☐ MOBILE HOME	☐ CONC BLK
☐ BI/TR LEVEL	☐ METAL
☐ MOD/MAN	■ BRICK
☐ _____	☐ STONE

ROOFING	ROOF TYPE
☐ METAL	■ GABLE
☐ SLT/TLE	☐ HIP
■ SHINGLES	☐ GAMBREL
☐ SHAKES	☐ MANSARD
☐ COMPOSITE	☐ FLAT

FLOORS	B	1	2	3	U
CONCRETE	■	☐	☐	☐	☐
WOOD	☐	☐	☐	☐	☐
TILE/COMPO	☐	■	☐	☐	☐
CARPET	☐	■	■	☐	☐

INT. FINISH	B	1	2	3	U
PLASTER/DW	☐	■	■	☐	☐
PANELING	☐	☐	☐	☐	☐
UNFINISHED	☐	☐	☐	■	☐

ACCOMMODATIONS					
# OF ROOMS	2	4	3		
BEDROOMS		1	2		
FIREPLACES					

HEAT & AC	B	1	2	3	U
NO HEAT	☐	☐	☐	☐	☐
CTRL HEAT	■	■	■	☐	☐
HW/STEAM	☐	☐	☐	☐	☐
ELECTRIC	☐	☐	☐	☐	☐
HEAT PUMP	☐	☐	☐	☐	☐
FLR/WALL	☐	☐	☐	☐	☐
STVE/SPCE	☐	☐	☐	☐	☐
GEOTHERMAL	☐	☐	☐	☐	☐
OUTSIDE	☐	☐	☐	☐	☐
CTRL A/C	■	■	■	☐	☐

PLUMBING			BASE ■		
X FULL BATH			1		
X HALF BATH					
X FIXTURES					

FLOOR	AREA	CONST	VALUE
1	1280	BRK	199,240
.5	640	BRK	61,760
+	0	FR	11,730
BSMT	1280		18,300
SUBTOTAL			291,030
MULTI-FAMILY #	0		0
BUILDING TYPE	100%		0
BSMT FINISH	640 S.F.		9,150
FIREPLACE #	0		0
HEATING	0 S.F.		0
AIR COND	2,560 S.F.		4,230
PLUMBING #	3		3,630
GARAGES & CARPORTS			25,000
EXTRA FEATURES			10,900
SUBTOTAL			343,940
GRADE FACTOR			105 %
UNADJUSTED VALUE			361,140
FACTOR			100 %

SKETCH

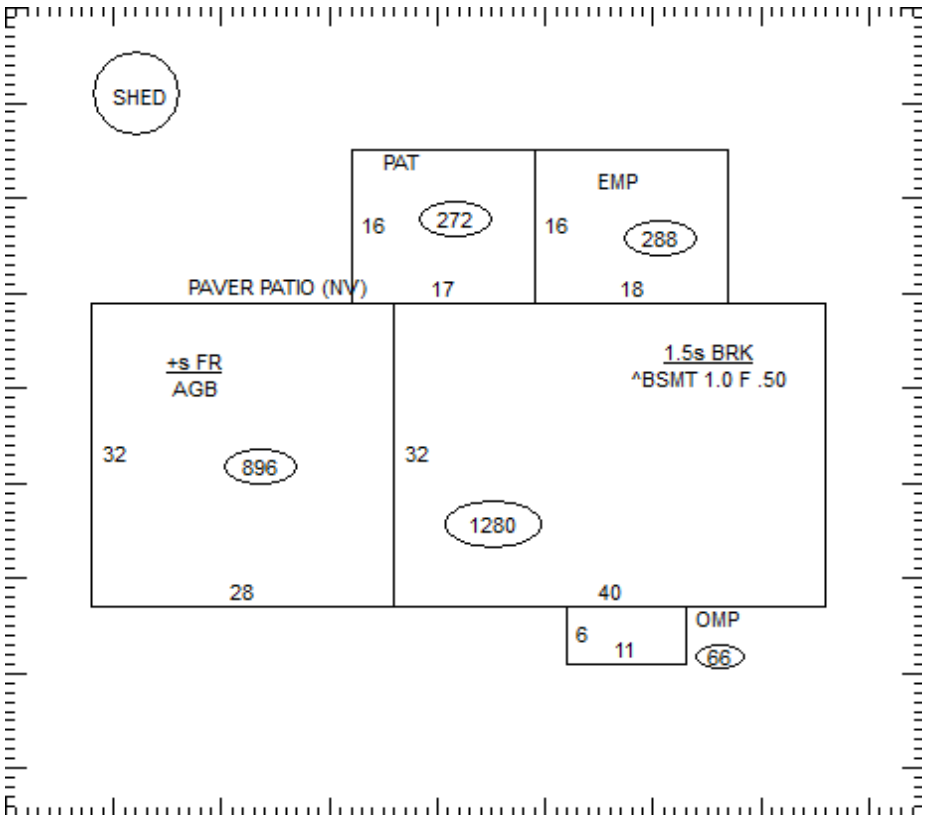

OCCUPANCY	ST.HT	SIZE	AREA	GRADE	PRICE	AGE	REMD	CND	UNADJ VAL	PHYS	PHYS VAL	FUNC	TRUE VAL
DWELLING	1.5	SK	1,920	C+		1985		A	361,140	28	260,020		223,600
1 Shed		15x15	225	C	7.70	2017		A	1,730	7	1,610		1,600
2													
3													
4													
5													
6													
7													
8													
9													
10													
11													
											TOTAL		225,200

27-481500.0000

COMMENTS

Dwelling has an Economic Factor of 86% (Rollback Basis=$254,900)