27-477703.0000

HATCHER BYRON W & JANET A
HATCHER BYRON W & JANET A
336 BRUNS AVE
CELINA, OH 45822

JEFFERSON TWP-CELINA CORP / CELINA SD
05-36-126-028

LEGAL INFORMATION
PLAT AND REPLAT OF TRACT NO. 3
AND LOTS NO. 82 THRU 92 OF BRUNS SUBD
LOT:# 144 & SEC LAND

Property Class: 510
Neighborhood
27502700-03 -
Map: 01 B
Block:
Card: 70
Bk: Pg:

	OWNERSHIP	ADDRESS	CITY	STATE	ZIP	DATE	AMOUNT	DEED:CONV#	JS	VALID
1	HATCHER BYRON W & JANET	336 BRUNS AVE	CELINA	OH	45822	11/01/2019	245,000	WDC : 749	☐	■
2	REICHERT MARY ANN	336 BRUNS AVE	CELINA	OH	45822	03/02/2006	0	QCE : X : 0	☐	☐
3	REICHERT EUGENE J & MARY	336 BRUNS AVE	CELINA	OH	45822	09/05/1991	20,900	: A : 0	☐	■

X: ☐ TTO LISTER: JO DATE: 05/17/2005 TIME: 12:00:00 AM ☐ LETTER ■ LETTER REC'D GIS CODE

STREET/ROAD	TOPOGRAPHY	PU-UTILITIES-PR	NEIGHBORHOOD	INFLUENCE FACTORS	
■ PAVED	■ LEVEL	☐ WATER ☐	■ IMPROVING	☐ A. NO ROAD	☐ F. RESTRICT
☐ GRAVEL	☐ HIGH	☐ SEWER ☐	☐ STATIC	☐ B. TOPGRHY	☐ G. WOOD LT
☐ DIRT	☐ LOW	☐ GAS ☐	☐ DECLINING	☐ C. Ex Front	☐ H. VACANCY
■ SIDEWALKS	☐ ROLLING	☐ ELECTRIC ☐	☐ OLD	☐ D. QUANTITY	☐ I. WATER FRONT
☐ CURBS	☐ STANDARD	■ STANDARD	☐ STANDARD	☐ E. SZ/SHAPE	☐ J. OTHER/CDU

PROPERTY LOCATION
336 BRUNS AVE, CELINA

COMMENT
TY2022:Net Gen=$3,597.90, Other Assessment=$0.00
DE16 DESKTOP REVIEW//CORR OFP TO OMP
DE22 ADD HALF BATH PER DATA MAILER

LAND COMPUTATIONS

LAND TYPE	SIZE	M RATE C	INF	M VALUE C
F:Front	F98 D159	ST430 DP103 ADJ443		43,400 0
			TOTAL	43,400 0

VALUATION SUMMARY

VALUE YEAR		2023	2022	2020	2017				
REASON FOR CHANGE		RAPP	MISC	RAPP	RAPP				
APPRAISED VALUE	LAND	43,400	32,100	32,100	26,300				
	IMPR	248,700	195,500	193,300	164,600				
	TOTAL	292,100	227,600	225,400	190,900				
ASSESSED VALUE	LAND	15,190	11,240	11,240	9,210				
	IMPR	87,050	68,430	67,660	57,610				
	TOTAL	102,240	79,670	78,900	66,820				

OCCUPANCY	EXTERIOR
■SF ☐DU ☐TR	☐ WOOD
☐CONVERSION	☐ STUCCO
BUILDING TYPE	■ ALM/VYNL
☐ MOBILE HOME	☐ CONC BLK
☐ BI/TR LEVEL	☐ METAL
☐ MOD/MAN	■ BRICK
☐ _____	☐ STONE
ROOFING	**ROOF TYPE**
☐ METAL	■ GABLE
☐ SLT/TLE	☐ HIP
■ SHINGLES	☐ GAMBREL
☐ SHAKES	☐ MANSARD
☐ COMPOSITE	☐ FLAT

FLOORS	B	1	2	3	U
CONCRETE	☐	☐	☐	☐	☐
WOOD	☐	☐	☐	☐	☐
TILE/COMPO	☐	☐	☐	☐	☐
CARPET	■	■	☐	☐	☐

INT. FINISH	B	1	2	3	U
PLASTER/DW	■	■	☐	☐	☐
PANELING	☐	☐	☐	☐	☐
UNFINISHED	☐	☐	☐	☐	☐

ACCOMMODATIONS					
# OF ROOMS		6			
BEDROOMS		3			
FIREPLACES		1			

HEAT & AC	B	1	2	3	U
NO HEAT	☐	☐	☐	☐	☐
CTRL HEAT	■	■	☐	☐	☐
HW/STEAM	☐	☐	☐	☐	☐
ELECTRIC	☐	☐	☐	☐	☐
HEAT PUMP	☐	☐	☐	☐	☐
FLR/WALL	☐	☐	☐	☐	☐
STVE/SPCE	☐	☐	☐	☐	☐
GEOTHERMAL	☐	☐	☐	☐	☐
OUTSIDE	☐	☐	☐	☐	☐
CTRL A/C	■	■	☐	☐	☐

PLUMBING					BASE ■
X FULL BATH	1	1			
X HALF BATH		1			
X FIXTURES					

FLOOR	AREA	CONST	VALUE
1	1863	FR	225,140
BSMT	1863		26,640
SUBTOTAL			251,780
MULTI-FAMILY #	0		0
BUILDING TYPE	100%		0
BSMT FINISH	480 S.F.		6,860
FIREPLACE #	1		4,400
HEATING	0 S.F.		0
AIR COND	2,343 S.F.		3,860
PLUMBING #	8		9,680
GARAGES & CARPORTS			14,200
EXTRA FEATURES			8,800
SUBTOTAL			299,580
GRADE FACTOR			115 %
UNADJUSTED VALUE			344,520
FACTOR			100 %

SKETCH

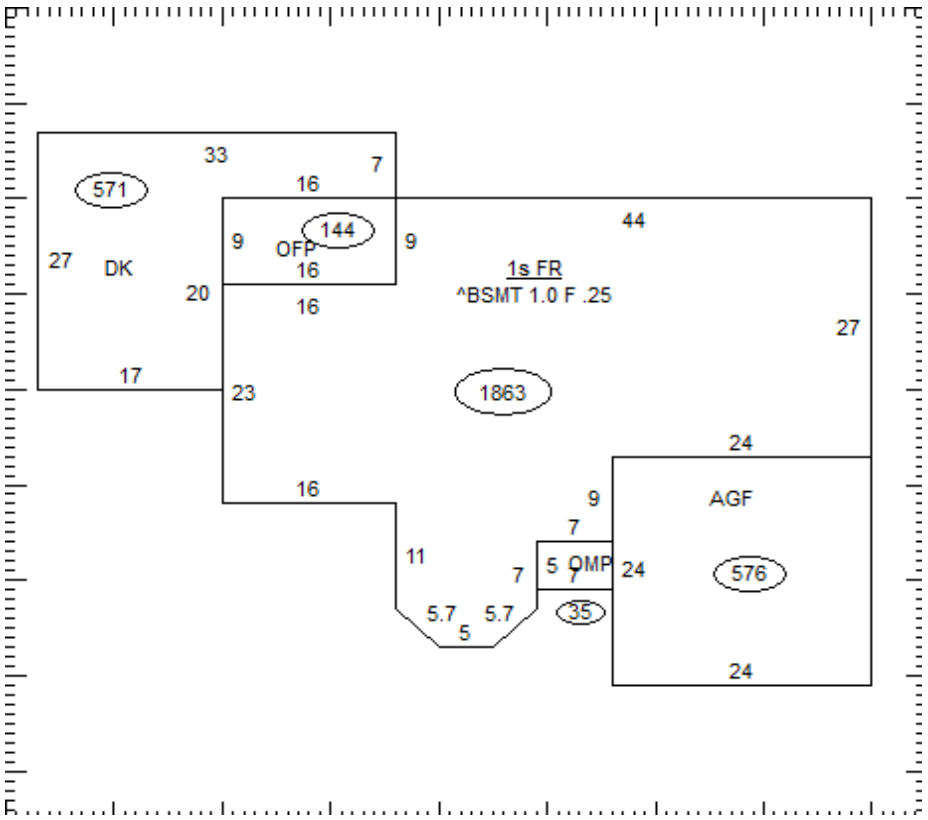

OCCUPANCY	ST.HT	SIZE	AREA	GRADE	PRICE	AGE	REMD	CND	UNADJ VAL	PHYS	PHYS VAL	FUNC	TRUE VAL
DWELLING	1	SK	1,863	B-		1992		A	344,520	24	261,840		248,700
1													
2													
3													
4													
5													
6													
7													
8													
9													
10													
11													
											TOTAL		248,700

27-477703.0000

COMMENTS

50 LF BRICK TRIM 8' HIGH
Dwelling has an Economic Factor of 95%