27-476200.0000

BOESS BRIAN J & VALERIE R
BOESS BRIAN J & VALERIE R
1529 MARY LN
CELINA, OH 45822

JEFFERSON TWP-CELINA CORP / CELINA SD
05-36-128-023

LEGAL INFORMATION
BRUNS SUBD

LOT#: 126

Property Class: 510
Neighborhood
27502700-03 -
Map: 01 B
Block:
Card: 103
Bk: Pg:

	OWNERSHIP	ADDRESS	CITY	STATE	ZIP	DATE	AMOUNT	DEED:CONV#	JS	VALID
1	BOESS BRIAN J & VALERIE R	1529 MARY LN	CELINA	OH	45822	11/15/2021	280,000	WDC : 958	☐	■
2	MUETHER WILLIAM J & JULIE	1529 MARY LN	CELINA	OH	45822	08/24/2020	240,000	WDC : 590	☐	■
3	THEES PATRICIA & NEFF	1529 MARY LN	CELINA	OH	45822	11/27/2018	236,000	WDC : 928	☐	■

X: ☐ TTO LISTER: JO DATE: 05/25/2005 TIME: 12:00:00 AM ☐ LETTER ■ LETTER REC'D GIS CODE

STREET/ROAD	TOPOGRAPHY	PU-UTILITIES-PR	NEIGHBORHOOD	INFLUENCE FACTORS	
■ PAVED	■ LEVEL	☐ WATER ☐	☐ IMPROVING	☐ A. NO ROAD	☐ F. RESTRICT
☐ GRAVEL	☐ HIGH	☐ SEWER ☐	■ STATIC	☐ B. TOPGRHY	☐ G. WOOD LT
☐ DIRT	☐ LOW	☐ GAS ☐	☐ DECLINING	☐ C. Ex Front	☐ H. VACANCY
■ SIDEWALKS	☐ ROLLING	☐ ELECTRIC ☐	☐ OLD	☐ D. QUANTITY	☐ I. WATER FRONT
☐ CURBS	☐ STANDARD	■ STANDARD	☐ STANDARD	☐ E. SZ/SHAPE	☐ J. OTHER/CDU

PROPERTY LOCATION
1529 MARY LN, CELINA

COMMENT
TY2022:Net Gen=$3,249.82, Other Assessment=$0.00
DE09 CORR FIN BSMNT PER DATA MAILER
DE22 RMV OWN OCC - DID NOT RETURN APP

LAND COMPUTATIONS

LAND TYPE	SIZE	M RATE C	INF	M VALUE C
F:Front	F100 D120	ST430 DP89 ADJ383		38,300 0
			TOTAL	38,300 0

VALUATION SUMMARY

VALUE YEAR		2023	2020	2017					
REASON FOR CHANGE		RAPP	RAPP	RAPP					
APPRAISED VALUE	LAND	38,300	28,200	23,100					
	IMPR	215,500	172,900	132,500					
	TOTAL	253,800	201,100	155,600					
ASSESSED VALUE	LAND	13,410	9,870	8,090					
	IMPR	75,430	60,520	46,380					
	TOTAL	88,840	70,390	54,470					

OCCUPANCY	EXTERIOR
■SF ☐DU ☐TR	☐ WOOD
☐CONVERSION	☐ STUCCO
BUILDING TYPE	■ ALM/VYNL
☐ MOBILE HOME	☐ CONC BLK
☐ BI/TR LEVEL	☐ METAL
☐ MOD/MAN	☐ BRICK
☐ _____	☐ STONE
ROOFING	**ROOF TYPE**
☐ METAL	■ GABLE
☐ SLT/TLE	☐ HIP
■ SHINGLES	☐ GAMBREL
☐ SHAKES	☐ MANSARD
☐ COMPOSITE	☐ FLAT

FLOORS	B	1	2	3	U
CONCRETE	■	☐	☐	☐	☐
WOOD	☐	☐	☐	☐	☐
TILE/COMPO	☐	■	■	☐	☐
CARPET	☐	■	■	☐	☐

INT. FINISH	B	1	2	3	U
PLASTER/DW	☐	■	■	☐	☐
PANELING	☐	☐	☐	☐	☐
UNFINISHED	■	☐	☐	☐	☐

ACCOMMODATIONS					
# OF ROOMS		4	4		
BEDROOMS			4		
FIREPLACES					

HEAT & AC	B	1	2	3	U
NO HEAT	☐	☐	☐	☐	☐
CTRL HEAT	☐	■	■	☐	☐
HW/STEAM	☐	☐	☐	☐	☐
ELECTRIC	☐	☐	☐	☐	☐
HEAT PUMP	☐	☐	☐	☐	☐
FLR/WALL	☐	☐	☐	☐	☐
STVE/SPCE	☐	☐	☐	☐	☐
GEOTHERMAL	☐	☐	☐	☐	☐
OUTSIDE	☐	☐	☐	☐	☐
CTRL A/C	☐	■	■	☐	☐

PLUMBING			BASE ■		
X FULL BATH		1			
X HALF BATH			1		
X FIXTURES					

FLOOR	AREA	CONST	VALUE
1	1282	FR	186,510
2ND	952	FR	66,480
BSMT	1282		18,330

SUBTOTAL			271,320
MULTI-FAMILY #	0		0
BUILDING TYPE	100%		0
BSMT FINISH	626	S.F.	8,950
FIREPLACE #	0		0
HEATING	0	S.F.	0
AIR COND	2,234	S.F.	3,690
PLUMBING #	5		6,050
GARAGES & CARPORTS			12,000
EXTRA FEATURES			4,500
SUBTOTAL			306,510
GRADE FACTOR			100 %
UNADJUSTED VALUE			306,510
FACTOR			100 %

SKETCH

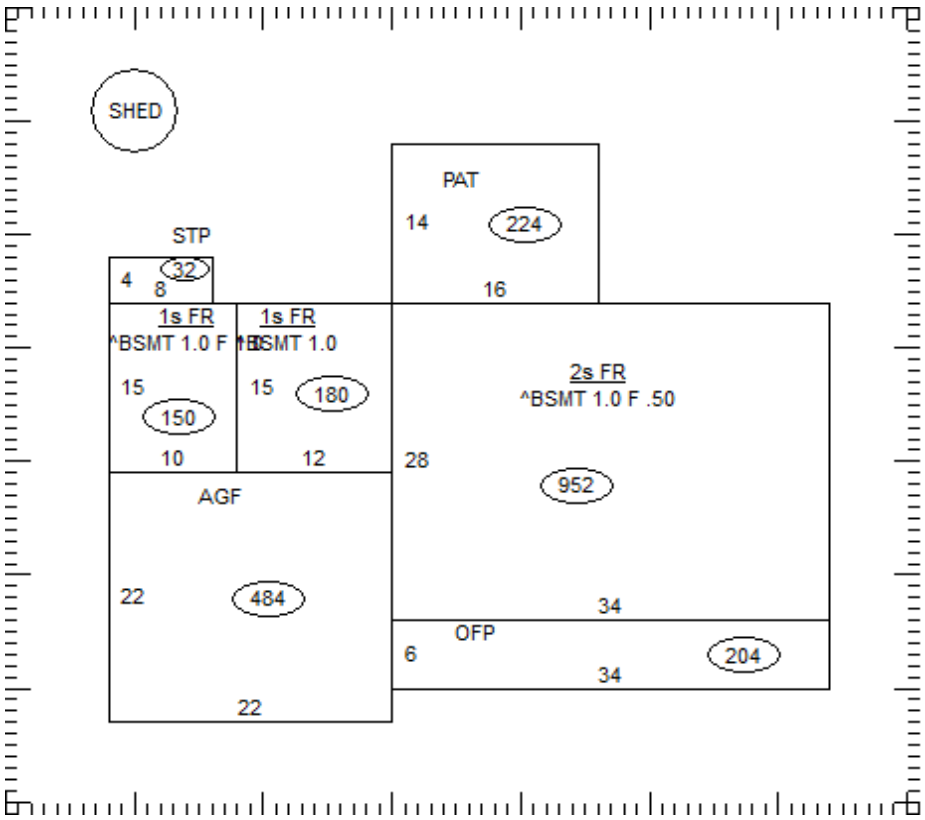

OCCUPANCY	ST.HT	SIZE	AREA	GRADE	PRICE	AGE	REMD	CND	UNADJ VAL	PHYS	PHYS VAL	FUNC	TRUE VAL
DWELLING	2	SK	2,234	C		1991		A	306,510	26	226,820		215,500
1 Shed	PP	8x10	80	C		2001		A		37			0
2													
3													
4													
5													
6													
7													
8													
9													
10													
11													
											TOTAL		215,500

27-476200.0000

COMMENTS

Dwelling has an Economic Factor of 95%

27-476200.0000

BOESS BRIAN J & VALERIE R
BOESS BRIAN J & VALERIE R
1529 MARY LN
CELINA, OH 45822

JEFFERSON TWP-CELINA CORP / CELINA SD
05-36-128-023

LEGAL INFORMATION
BRUNS SUBD

LOT#: 126

Property Class: 510
Neighborhood
27502700-03 -
Map: 01 B
Block:
Card: 103
Bk: Pg:

	OWNERSHIP	ADDRESS	CITY	STATE	ZIP	DATE	AMOUNT	DEED:CONV#	JS	VALID
1	MILLER JAMES A & BETH A	1529 MARY LN	CELINA	OH	45822	12/18/1995	145,500	: A : 0	☐	☐
2							0	0	☐	☐
3							0	0	☐	☐

X: ☐ TTO LISTER: JO DATE: 05/25/2005 TIME: 12:00:00 AM ☐ LETTER ■ LETTER REC'D GIS CODE

STREET/ROAD	TOPOGRAPHY	PU-UTILITIES-PR	NEIGHBORHOOD	INFLUENCE FACTORS	
■ PAVED	■ LEVEL	☐ WATER ☐	☐ IMPROVING	☐ A. NO ROAD	☐ F. RESTRICT
☐ GRAVEL	☐ HIGH	☐ SEWER ☐	■ STATIC	☐ B. TOPGRHY	☐ G. WOOD LT
☐ DIRT	☐ LOW	☐ GAS ☐	☐ DECLINING	☐ C. Ex Front	☐ H. VACANCY
■ SIDEWALKS	☐ ROLLING	☐ ELECTRIC ☐	☐ OLD	☐ D. QUANTITY	☐ I. WATER FRONT
☐ CURBS	☐ STANDARD	■ STANDARD	☐ STANDARD	☐ E. SZ/SHAPE	☐ J. OTHER/CDU

PROPERTY LOCATION
1529 MARY LN, CELINA

COMMENT

LAND COMPUTATIONS

LAND TYPE	SIZE	M RATE C	INF	M VALUE C
			TOTAL	38,300 0

VALUATION SUMMARY

VALUE YEAR									
REASON FOR CHANGE									
APPRAISED VALUE	LAND								
	IMPR								
	TOTAL								
ASSESSED VALUE	LAND								
	IMPR								
	TOTAL								

OCCUPANCY	EXTERIOR
☐SF ☐DU ☐TR	☐ WOOD
☐CONVERSION	☐ STUCCO
BUILDING TYPE	☐ ALM/VYNL
☐ MOBILE HOME	☐ CONC BLK
☐ BI/TR LEVEL	☐ METAL
☐ MOD/MAN	☐ BRICK
☐ _____	☐ STONE

ROOFING	ROOF TYPE
☐ METAL	☐ GABLE
☐ SLT/TLE	☐ HIP
☐ SHINGLES	☐ GAMBREL
☐ SHAKES	☐ MANSARD
☐ COMPOSITE	☐ FLAT

FLOORS	B	1	2	3	U
CONCRETE	☐	☐	☐	☐	☐
WOOD	☐	☐	☐	☐	☐
TILE/COMPO	☐	☐	☐	☐	☐
CARPET	☐	☐	☐	☐	☐

INT. FINISH	B	1	2	3	U
PLASTER/DW	☐	☐	☐	☐	☐
PANELING	☐	☐	☐	☐	☐
UNFINISHED	☐	☐	☐	☐	☐

ACCOMMODATIONS					
# OF ROOMS					
BEDROOMS					
FIREPLACES					

HEAT & AC	B	1	2	3	U
NO HEAT	☐	☐	☐	☐	☐
CTRL HEAT	☐	☐	☐	☐	☐
HW/STEAM	☐	☐	☐	☐	☐
ELECTRIC	☐	☐	☐	☐	☐
HEAT PUMP	☐	☐	☐	☐	☐
FLR/WALL	☐	☐	☐	☐	☐
STVE/SPCE	☐	☐	☐	☐	☐
GEOTHERMAL	☐	☐	☐	☐	☐
OUTSIDE	☐	☐	☐	☐	☐
CTRL A/C	☐	☐	☐	☐	☐

PLUMBING	BASE ☐				
X FULL BATH					
X HALF BATH					
X FIXTURES					

FLOOR	AREA	CONST	VALUE

SUBTOTAL		0
MULTI-FAMILY #	0	0
BUILDING TYPE	000%	0
BSMT FINISH	0 S.F.	0
FIREPLACE #	0	0
HEATING	0 S.F.	0
AIR COND	0 S.F.	0
PLUMBING #	0	0
GARAGES & CARPORTS		0
EXTRA FEATURES		0
SUBTOTAL		0
GRADE FACTOR		%
UNADJUSTED VALUE		0
FACTOR		%

SKETCH

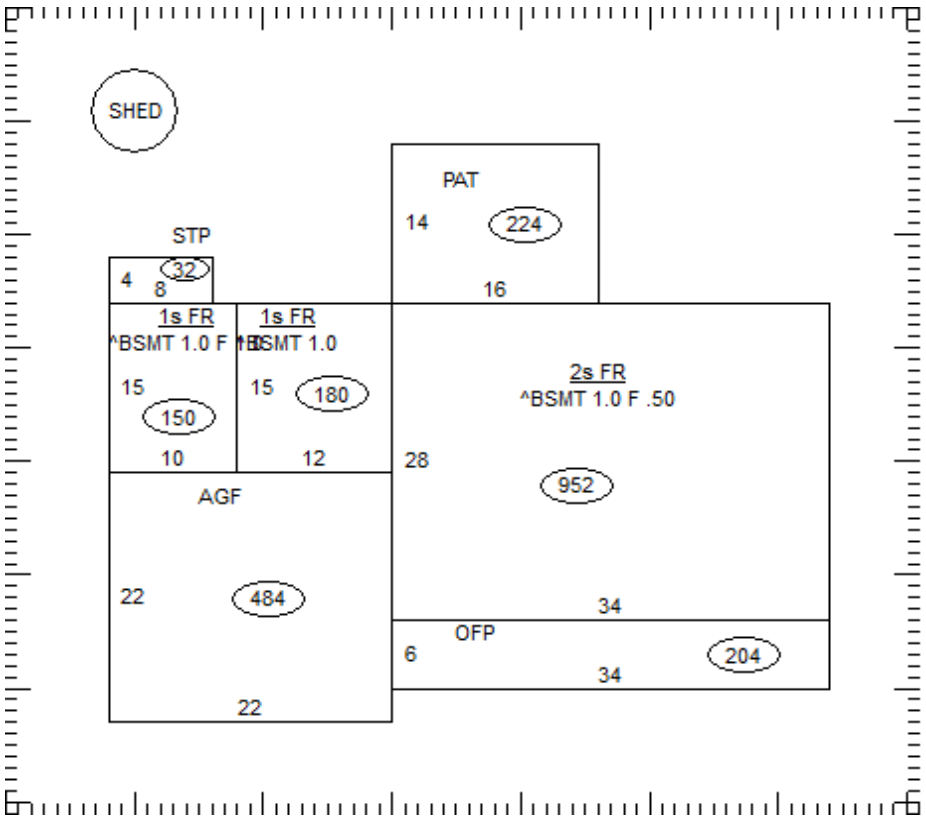

OCCUPANCY	ST.HT	SIZE	AREA	GRADE	PRICE	AGE	REMD	CND	UNADJ VAL	PHYS	PHYS VAL	FUNC	TRUE VAL
DWELLING		SK											
1													
2													
3													
4													
5													
6													
7													
8													
9													
10													
11													
												TOTAL	0

27-476200.0000

COMMENTS