27-467100.0000

SNIDER GREG S & JENNY S
SNIDER GREG S & JENNY S
1336 MICHAEL AVE
CELINA, OH 45822

JEFFERSON TWP-CELINA CORP / CELINA SD
05-36-178-004

LEGAL INFORMATION
BRUNS SUBD

LOT#: 35

Property Class: 510
Neighborhood
27502700-03 -
Map: 01 B
Block:
Card: 32
Bk: Pg:

	OWNERSHIP	ADDRESS	CITY	STATE	ZIP	DATE	AMOUNT	DEED:CONV#	JS	VALID
1	SNIDER GREG S & JENNY S	1336 MICHAEL AVE	CELINA	OH	45822	07/22/1996	18,500	: A : 0	☐	☐
2							0	0	☐	☐
3							0	0	☐	☐

X: ☐ TTO LISTER: DATE: 04/04/2011 TIME: 12:00:00 AM ☐ LETTER ☐ LETTER REC'D GIS CODE

STREET/ROAD	TOPOGRAPHY	PU-UTILITIES-PR	NEIGHBORHOOD	INFLUENCE FACTORS	
■ PAVED	■ LEVEL	☐ WATER ☐	☐ IMPROVING	☐ A. NO ROAD	☐ F. RESTRICT
☐ GRAVEL	☐ HIGH	☐ SEWER ☐	■ STATIC	☐ B. TOPGRHY	☐ G. WOOD LT
☐ DIRT	☐ LOW	☐ GAS ☐	☐ DECLINING	☐ C. Ex Front	☐ H. VACANCY
■ SIDEWALKS	☐ ROLLING	☐ ELECTRIC ☐	☐ OLD	☐ D. QUANTITY	☐ I. WATER FRONT
☐ CURBS	☐ STANDARD	■ STANDARD	☐ STANDARD	☐ E. SZ/SHAPE	☐ J. OTHER/CDU

PROPERTY LOCATION
1336 MICHAEL AVE, CELINA

COMMENT
TY2022:Net Gen=$2,734.90, Other Assessment=$0.00
DE11 ADD PATIO

LAND COMPUTATIONS

LAND TYPE	SIZE	M RATE C	INF	M VALUE C
F:Front	F95 D120	ST430 DP89 ADJ383		36,400 0
			TOTAL	36,400 0

VALUATION SUMMARY

VALUE YEAR		2023	2020	2017					
REASON FOR CHANGE		RAPP	RAPP	RAPP					
APPRAISED VALUE	LAND	36,400	26,700	21,900					
	IMPR	189,500	146,300	114,500					
	TOTAL	225,900	173,000	136,400					
ASSESSED VALUE	LAND	12,740	9,350	7,670					
	IMPR	66,330	51,210	40,080					
	TOTAL	79,070	60,560	47,750					

OCCUPANCY	EXTERIOR
■ SF ☐ DU ☐ TR	☐ WOOD
☐ CONVERSION	☐ STUCCO
BUILDING TYPE	■ ALM/VYNL
☐ MOBILE HOME	☐ CONC BLK
☐ BI/TR LEVEL	☐ METAL
☐ MOD/MAN	☐ BRICK
☐ _____	☐ STONE

ROOFING	ROOF TYPE
☐ METAL	■ GABLE
☐ SLT/TLE	☐ HIP
■ SHINGLES	☐ GAMBREL
☐ SHAKES	☐ MANSARD
☐ COMPOSITE	☐ FLAT

FLOORS	B	1	2	3	U
CONCRETE	☐	☐	☐	☐	☐
WOOD	☐	☐	☐	☐	☐
TILE/COMPO	☐	■	☐	☐	☐
CARPET	☐	■	☐	☐	☐

INT. FINISH	B	1	2	3	U
PLASTER/DW	☐	■	☐	☐	☐
PANELING	☐	☐	☐	☐	☐
UNFINISHED	■	☐	☐	☐	☐

ACCOMMODATIONS					
# OF ROOMS	1	7			
BEDROOMS		3			
FIREPLACES					

HEAT & AC	B	1	2	3	U
NO HEAT	☐	☐	☐	☐	☐
CTRL HEAT	☐	■	☐	☐	☐
HW/STEAM	☐	☐	☐	☐	☐
ELECTRIC	☐	☐	☐	☐	☐
HEAT PUMP	☐	☐	☐	☐	☐
FLR/WALL	☐	☐	☐	☐	☐
STVE/SPCE	☐	☐	☐	☐	☐
GEOTHERMAL	☐	☐	☐	☐	☐
OUTSIDE	☐	☐	☐	☐	☐
CTRL A/C	☐	■	☐	☐	☐

PLUMBING					BASE ■
X FULL BATH		1			
X HALF BATH		1			
X FIXTURES					

FLOOR	AREA	CONST	VALUE
1	1524	FR	203,650
BSMT	1164		16,650
SUBTOTAL			220,300
MULTI-FAMILY #	0		0
BUILDING TYPE	100%		0
BSMT FINISH	0 S.F.		0
FIREPLACE #	0		0
HEATING	0 S.F.		0
AIR COND	1,524 S.F.		2,510
PLUMBING #	5		6,050
GARAGES & CARPORTS			19,800
EXTRA FEATURES			1,300
SUBTOTAL			249,960
GRADE FACTOR			105 %
UNADJUSTED VALUE			262,460
FACTOR			100 %

SKETCH

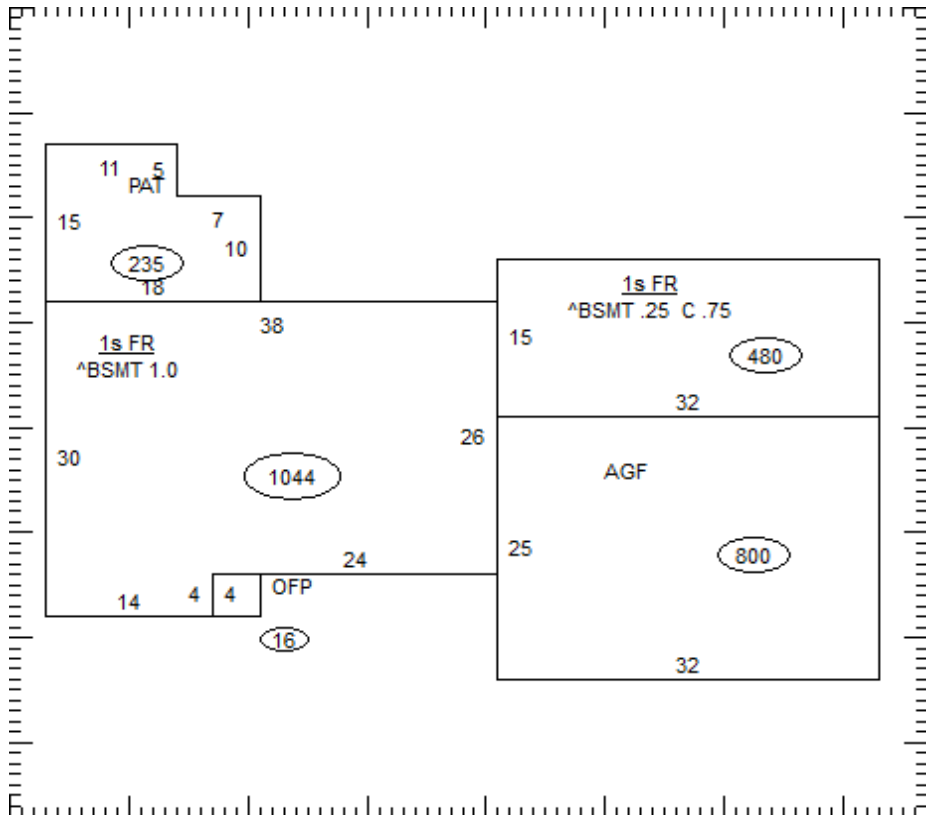

OCCUPANCY	ST.HT	SIZE	AREA	GRADE	PRICE	AGE	REMD	CND	UNADJ VAL	PHYS	PHYS VAL	FUNC	TRUE VAL
DWELLING	1	SK	1,524	C+		1996		A	262,460	24	199,470		189,500
1													
2													
3													
4													
5													
6													
7													
8													
9													
10													
11													
											TOTAL		189,500

27-467100.0000

COMMENTS

24 L/F STONE TRIM 8' HIGH
Dwelling has an Economic Factor of 95%