27-466700.0000

HINKLE CURTIS D & HEMMERT ANDREA N
HINKLE CURTIS D & HEMMERT ANDREA N
1320 MICHAEL AVE
CELINA, OH 45822

JEFFERSON TWP-CELINA CORP / CELINA SD
05-36-178-008

LEGAL INFORMATION
BRUNS SUBD

LOT#: 31

Property Class: 510
Neighborhood
27502700-03 -
Map: 01B
Block:
Card: 36
Bk: Pg:

	OWNERSHIP	ADDRESS	CITY	STATE	ZIP	DATE	AMOUNT	DEED:CONV#	JS	VALID
1	HINKLE CURTIS D & HEMMERT	1320 MICHAEL AVE	CELINA	OH	45822	01/21/2020	236,500	WDC : 39	☐	■
2	NOLL LATRICIA A	1320 MICHAEL AVE	CELINA	OH	45822	08/11/2005	179,900	WDC : A : 0	☐	■
3	LIMA SUPERIOR FCU ATTN S					10/12/2001	138,000	: A : 0	☐	■

X: ☐ TTO LISTER: JK DATE: 03/01/2013 TIME: 12:00:00 AM ☐ LETTER ☐ LETTER REC'D GIS CODE

STREET/ROAD	TOPOGRAPHY	PU-UTILITIES-PR	NEIGHBORHOOD	INFLUENCE FACTORS	
■ PAVED	■ LEVEL	☐ WATER ☐	☐ IMPROVING	☐ A. NO ROAD	☐ F. RESTRICT
☐ GRAVEL	☐ HIGH	☐ SEWER ☐	■ STATIC	☐ B. TOPGRHY	☐ G. WOOD LT
☐ DIRT	☐ LOW	☐ GAS ☐	☐ DECLINING	☐ C. Ex Front	☐ H. VACANCY
■ SIDEWALKS	☐ ROLLING	☐ ELECTRIC ☐	☐ OLD	☐ D. QUANTITY	☐ I. WATER FRONT
☐ CURBS	☐ STANDARD	■ STANDARD	☐ STANDARD	☐ E. SZ/SHAPE	☐ J. OTHER/CDU

PROPERTY LOCATION
1320 MICHAEL AVE, CELINA

COMMENT
Tax Incentive Exempt Parcel: 27-466700.000A (TY2022 L=0; B=0; T=0)
TY2022:Net Gen=$3,228.54, Other Assessment=$0.00
DE13 ADD ING POOL
DE15 ABMNT EXP WDDK

LAND COMPUTATIONS

LAND TYPE	SIZE	M RATE C	INF	M VALUE C
F:Front	F95 D120	ST430 DP89 ADJ383		36,400 0
			TOTAL	36,400 0

VALUATION SUMMARY

VALUE YEAR		2023	2020	2017					
REASON FOR CHANGE		RAPP	RAPP	RAPP					
APPRAISED VALUE	LAND	36,400	26,700	21,900					
	IMPR	236,300	177,300	145,300					
	TOTAL	272,700	204,000	167,200					
ASSESSED VALUE	LAND	12,740	9,350	7,670					
	IMPR	82,710	62,060	50,860					
	TOTAL	95,450	71,410	58,530					

OCCUPANCY	EXTERIOR
■ SF ☐ DU ☐ TR	■ WOOD
☐ CONVERSION	☐ STUCCO
BUILDING TYPE	☐ ALM/VYNL
☐ MOBILE HOME	☐ CONC BLK
☐ BI/TR LEVEL	☐ METAL
☐ MOD/MAN	☐ BRICK
☐ _____	☐ STONE

ROOFING	ROOF TYPE
☐ METAL	■ GABLE
☐ SLT/TLE	☐ HIP
■ SHINGLES	☐ GAMBREL
☐ SHAKES	☐ MANSARD
☐ COMPOSITE	☐ FLAT

FLOORS	B	1	2	3	U
CONCRETE	■	☐	☐	☐	☐
WOOD	☐	☐	☐	☐	☐
TILE/COMPO	☐	■	☐	☐	☐
CARPET	☐	■	☐	☐	☐

INT. FINISH	B	1	2	3	U
PLASTER/DW	☐	■	☐	☐	☐
PANELING	☐	☐	☐	☐	☐
UNFINISHED	■	☐	☐	☐	☐

ACCOMMODATIONS					
# OF ROOMS	1	6			
BEDROOMS		3			
FIREPLACES					

HEAT & AC	B	1	2	3	U
NO HEAT	☐	☐	☐	☐	☐
CTRL HEAT	☐	■	☐	☐	☐
HW/STEAM	☐	☐	☐	☐	☐
ELECTRIC	☐	☐	☐	☐	☐
HEAT PUMP	☐	☐	☐	☐	☐
FLR/WALL	☐	☐	☐	☐	☐
STVE/SPCE	☐	☐	☐	☐	☐
GEOTHERMAL	☐	☐	☐	☐	☐
OUTSIDE	☐	☐	☐	☐	☐
CTRL A/C	☐	■	☐	☐	☐

PLUMBING					BASE ■
X FULL BATH		1			
X HALF BATH					
X FIXTURES		1			

FLOOR	AREA	CONST	VALUE
1	1543	FR	206,190
BSMT	1543		22,060
SUBTOTAL			228,250
MULTI-FAMILY #	0		0
BUILDING TYPE	100%		0
BSMT FINISH	0 S.F.		0
FIREPLACE #	0		0
HEATING	0 S.F.		0
AIR COND	1,543 S.F.		2,550
PLUMBING #	4		4,840
GARAGES & CARPORTS			12,000
EXTRA FEATURES			11,000
SUBTOTAL			258,640
GRADE FACTOR			115 %
UNADJUSTED VALUE			297,440
FACTOR			100 %

SKETCH

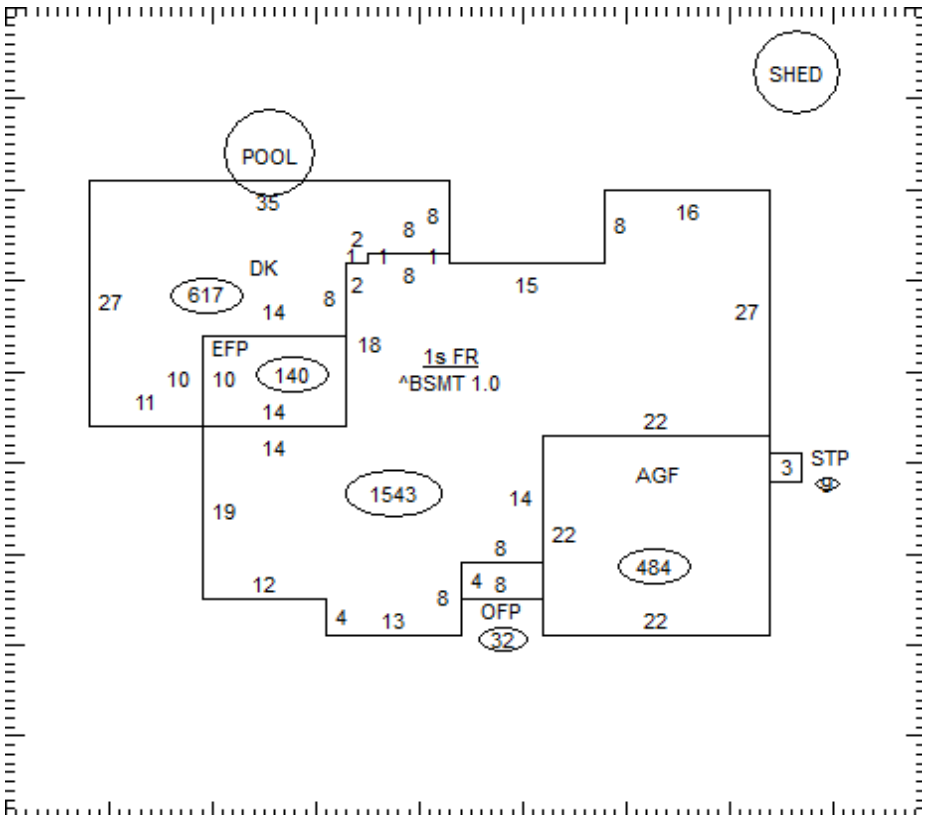

OCCUPANCY	ST.HT	SIZE	AREA	GRADE	PRICE	AGE	REMD	CND	UNADJ VAL	PHYS	PHYS VAL	FUNC	TRUE VAL
DWELLING	1	SK	1,543	B-		1995		A	297,440	22	232,000		220,400
1 Pool - Inground		16x32	512	C	37.50	2012		A	19,200	17	15,940		15,900
2 Shed		8x10	80	C		2012		A		17			0
3													
4													
5													
6													
7													
8													
9													
10													
11													
											TOTAL		236,300

27-466700.0000

COMMENTS

Dwelling has an Economic Factor of 95% (Rollback Basis=$256,800)