27-451000.0000

KUEHL JOSEPH A & ROBINSON REBECCA L
KUEHL JOSEPH A & ROBINSON REBECCA L
1119 JACKSON AVE
CELINA, OH 45822

JEFFERSON TWP-CELINA CORP / CELINA SD
06-31-180-019

LEGAL INFORMATION
BEECHWOOD HTS STAUFFER
SUB DIV L 19 N PT
LOT#: 19

Property Class: 510
Neighborhood
27502706
Map: 02
Block: 01
Card: 75
Bk: Pg:

	OWNERSHIP	ADDRESS	CITY	STATE	ZIP	DATE	AMOUNT	DEED:CONV#	JS	VALID
1	KUEHL JOSEPH A &	1119 JACKSON AVE	CELINA	OH	45822	06/13/2019	150,000	WDC : 407	☐	■
2	REED JAMES J	1119 JACKSON AVE	CELINA	OH	45822	06/07/2000	0	: X : 0	☐	☐
3							0	0	☐	☐

X: ☐ TTO LISTER: DATE: 05/23/2014 TIME: 12:00:00 AM ☐ LETTER ☐ LETTER REC'D GIS CODE

STREET/ROAD	TOPOGRAPHY	PU-UTILITIES-PR	NEIGHBORHOOD	INFLUENCE FACTORS	
■ PAVED	■ LEVEL	☐ WATER ☐	☐ IMPROVING	☐ A. NO ROAD	☐ F. RESTRICT
☐ GRAVEL	☐ HIGH	☐ SEWER ☐	■ STATIC	☐ B. TOPGRHY	☐ G. WOOD LT
☐ DIRT	☐ LOW	☐ GAS ☐	☐ DECLINING	☐ C. Ex Front	☐ H. VACANCY
■ SIDEWALKS	☐ ROLLING	☐ ELECTRIC ☐	☐ OLD	☐ D. QUANTITY	☐ I. WATER FRONT
☐ CURBS	☐ STANDARD	■ STANDARD	☐ STANDARD	☐ E. SZ/SHAPE	☐ J. OTHER/CDU

PROPERTY LOCATION
1119 JACKSON AVE, CELINA

COMMENT
Tax Incentive Exempt Parcel: 27-451000.000A (TY2022 L=0; B=0; T=0)
TY2022:Net Gen=$2,157.48, Other Assessment=$0.00
DE20 RMV OCC DID NOT RETURN
DE14 ABMNT EXP
DE11 RMV PAT, ADD ADDTN
DE09 CORR PLMNG PER DATA MAILER

LAND COMPUTATIONS

LAND TYPE	SIZE	M RATE C	INF	M VALUE C
F:Front	F96 D140	ST325 DP96 ADJ312		30,000 0
			TOTAL	30,000 0

VALUATION SUMMARY

VALUE YEAR		2023	2020	2017					
REASON FOR CHANGE		RAPP	RAPP	RAPP					
APPRAISED VALUE	LAND	30,000	28,800	24,000					
	IMPR	134,400	104,700	84,300					
	TOTAL	164,400	133,500	108,300					
ASSESSED VALUE	LAND	10,500	10,080	8,400					
	IMPR	47,040	36,650	29,510					
	TOTAL	57,540	46,730	37,910					

OCCUPANCY	EXTERIOR
■ SF ☐ DU ☐ TR	■ WOOD
☐ CONVERSION	☐ STUCCO
BUILDING TYPE	☐ ALM/VYNL
☐ MOBILE HOME	☐ CONC BLK
☐ BI/TR LEVEL	☐ METAL
☐ MOD/MAN	☐ BRICK
☐ _____	☐ STONE

ROOFING	ROOF TYPE
☐ METAL	■ GABLE
☐ SLT/TLE	☐ HIP
■ SHINGLES	☐ GAMBREL
☐ SHAKES	☐ MANSARD
☐ COMPOSITE	☐ FLAT

FLOORS	B	1	2	3	U
CONCRETE	■	☐	☐	☐	☐
WOOD	☐	■	☐	☐	☐
TILE/COMPO	☐	☐	☐	☐	☐
CARPET	☐	☐	☐	☐	☐

INT. FINISH	B	1	2	3	U
PLASTER/DW	☐	■	☐	☐	☐
PANELING	☐	☐	☐	☐	☐
UNFINISHED	■	☐	☐	☐	☐

ACCOMMODATIONS					
# OF ROOMS		5			
BEDROOMS		2			
FIREPLACES		1			

HEAT & AC	B	1	2	3	U
NO HEAT	☐	☐	☐	☐	☐
CTRL HEAT	☐	■	☐	☐	☐
HW/STEAM	☐	☐	☐	☐	☐
ELECTRIC	☐	☐	☐	☐	☐
HEAT PUMP	☐	☐	☐	☐	☐
FLR/WALL	☐	☐	☐	☐	☐
STVE/SPCE	☐	☐	☐	☐	☐
GEOTHERMAL	☐	☐	☐	☐	☐
OUTSIDE	☐	☐	☐	☐	☐
CTRL A/C	☐	■	☐	☐	☐

PLUMBING	BASE ■			
X FULL BATH				
X HALF BATH	2			
X FIXTURES				

FLOOR	AREA	CONST	VALUE
1	1446	FR	199,740
BSMT	1022		14,610

SUBTOTAL		214,350
MULTI-FAMILY #	0	0
BUILDING TYPE	100%	0
BSMT FINISH	0 S.F.	0
FIREPLACE #	1	4,400
HEATING	0 S.F.	0
AIR COND	1,446 S.F.	2,390
PLUMBING #	4	4,840
GARAGES & CARPORTS		17,400
EXTRA FEATURES		500
SUBTOTAL		243,880
GRADE FACTOR		100 %
UNADJUSTED VALUE		243,880
FACTOR		100 %

SKETCH

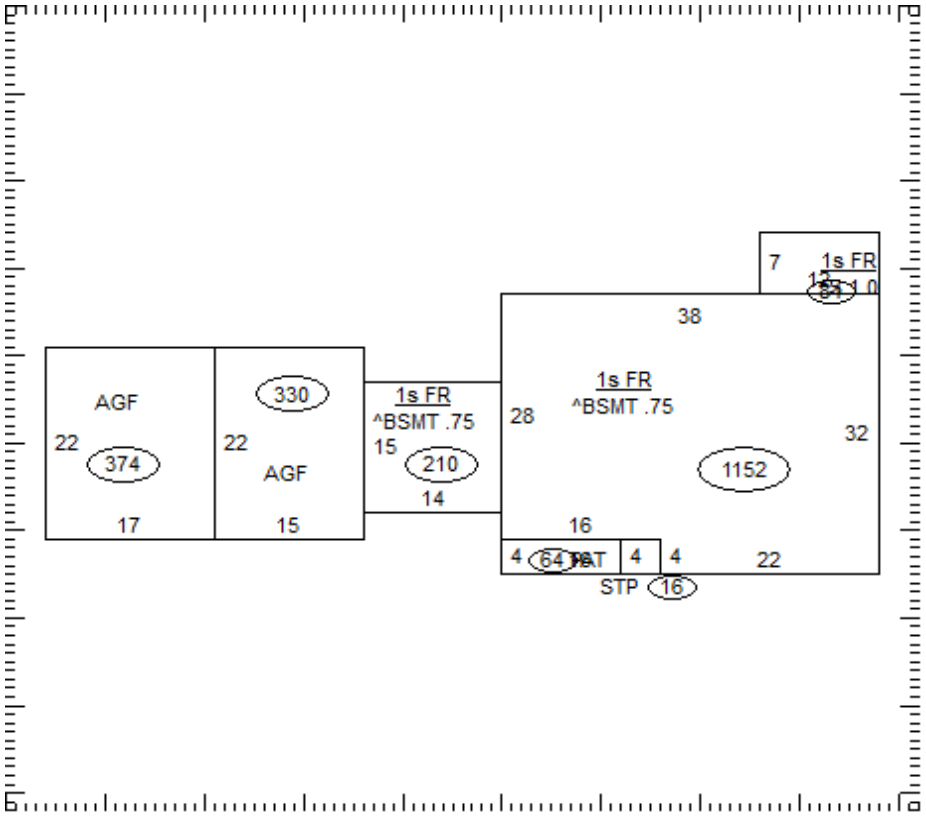

OCCUPANCY	ST.HT	SIZE	AREA	GRADE	PRICE	AGE	REMD	CND	UNADJ VAL	PHYS	PHYS VAL	FUNC	TRUE VAL
DWELLING	1	SK	1,446	C		1959		A	243,880	42	141,450		134,400
1													
2													
3													
4													
5													
6													
7													
8													
9													
10													
11													
											TOTAL		134,400

27-451000.0000

COMMENTS

Dwelling has an Economic Factor of 95%