27-450800.0000

JEFFERSON TWP-CELINA CORP / CELINA SD
06-31-180-021

Property Class: 510
Neighborhood 27502706
Map: 02
Block: 01
Card: 77
Bk: Pg:

BREWER FRANK & JENNIFER
BREWER FRANK & JENNIFER
1131 JACKSON AVE
CELINA, OH 45822

LEGAL INFORMATION
BEECHWOOD HTS STAUFFER SUD
S PT LOT 17 ALSO N PT LOT 18
LOT#: 18

	OWNERSHIP	ADDRESS	CITY	STATE	ZIP	DATE	AMOUNT	DEED:CONV#	JS	VALID
1	BREWER FRANK & JENNIFER	1131 JACKSON AVE	CELINA	OH	45822	05/15/2019	162,000	WDC : 312	☐	■
2	NOW MORRIS A & DORIS C	1506 MEADOWVIEW DR	CELINA	OH	45822	01/01/1900	0	: 0	☐	☐
3							0	0	☐	☐

X: ☐ TTO LISTER: LG DATE: 07/19/2005 TIME: 12:00:00 AM ☐ LETTER ■ LETTER REC'D GIS CODE

STREET/ROAD	TOPOGRAPHY	PU-UTILITIES-PR	NEIGHBORHOOD	INFLUENCE FACTORS	
■ PAVED	■ LEVEL	☐ WATER ☐	☐ IMPROVING	☐ A. NO ROAD	☐ F. RESTRICT
☐ GRAVEL	☐ HIGH	☐ SEWER ☐	■ STATIC	☐ B. TOPGRHY	☐ G. WOOD LT
☐ DIRT	☐ LOW	☐ GAS ☐	☐ DECLINING	☐ C. Ex Front	☐ H. VACANCY
■ SIDEWALKS	☐ ROLLING	☐ ELECTRIC ☐	☐ OLD	☐ D. QUANTITY	☐ I. WATER FRONT
☐ CURBS	☐ STANDARD	■ STANDARD	☐ STANDARD	☐ E. SZ/SHAPE	☐ J. OTHER/CDU

PROPERTY LOCATION
1131 JACKSON AVE, CELINA

COMMENT
TY2022:Net Gen=$2,540.24, Other Assessment=$0.00
DE16 COR HTG.AC SQ FTG
DE16 DESKTOP REVIEW//CORR SKETCH

LAND COMPUTATIONS

LAND TYPE	SIZE	M RATE C	INF	M VALUE C
F:Front	F52 D140	ST325 DP96 ADJ312		16,200 0
F:Front	F48 D140	ST325 DP96 ADJ312		15,000 0
			TOTAL	31,200 0

VALUATION SUMMARY

VALUE YEAR		2023	2020	2017					
REASON FOR CHANGE		RAPP	RAPP	RAPP					
APPRAISED VALUE	LAND	31,200	30,000	25,000					
	IMPR	155,100	130,700	101,800					
	TOTAL	186,300	160,700	126,800					
ASSESSED VALUE	LAND	10,920	10,500	8,750					
	IMPR	54,290	45,750	35,630					
	TOTAL	65,210	56,250	44,380					

OCCUPANCY	EXTERIOR
■SF ☐DU ☐TR	☐ WOOD
☐CONVERSION	☐ STUCCO
BUILDING TYPE	■ ALM/VYNL
☐ MOBILE HOME	☐ CONC BLK
☐ BI/TR LEVEL	☐ METAL
☐ MOD/MAN	☐ BRICK
☐ _____	☐ STONE

ROOFING	ROOF TYPE
☐ METAL	■ GABLE
☐ SLT/TLE	☐ HIP
■ SHINGLES	☐ GAMBREL
☐ SHAKES	☐ MANSARD
☐ COMPOSITE	☐ FLAT

FLOORS	B	1	2	3	U
CONCRETE	■	☐	☐	☐	☐
WOOD	☐	☐	☐	☐	☐
TILE/COMPO	☐	☐	☐	☐	☐
CARPET	☐	■	☐	☐	☐

INT. FINISH	B	1	2	3	U
PLASTER/DW	☐	■	☐	☐	☐
PANELING	☐	☐	☐	☐	☐
UNFINISHED	■	☐	☐	☐	☐

ACCOMMODATIONS					
# OF ROOMS	2	7			
BEDROOMS		3			
FIREPLACES		2			

HEAT & AC	B	1	2	3	U
NO HEAT	☐	☐	☐	☐	☐
CTRL HEAT	■	■	☐	☐	☐
HW/STEAM	☐	☐	☐	☐	☐
ELECTRIC	☐	☐	☐	☐	☐
HEAT PUMP	☐	☐	☐	☐	☐
FLR/WALL	☐	☐	☐	☐	☐
STVE/SPCE	☐	☐	☐	☐	☐
GEOTHERMAL	☐	☐	☐	☐	☐
OUTSIDE	☐	☐	☐	☐	☐
CTRL A/C	■	■	☐	☐	☐

PLUMBING					BASE ■
X FULL BATH		1			
X HALF BATH					
X FIXTURES					

FLOOR	AREA	CONST	VALUE
1	1900	FR	226,900
BSMT	1131		16,170
SUBTOTAL			243,070
MULTI-FAMILY #	0		0
BUILDING TYPE	100%		0
BSMT FINISH	566 S.F.		8,090
FIREPLACE #	2		8,800
HEATING	0 S.F.		0
AIR COND	2,466 S.F.		4,070
PLUMBING #	3		3,630
GARAGES & CARPORTS			12,000
EXTRA FEATURES			1,900
SUBTOTAL			281,560
GRADE FACTOR			100 %
UNADJUSTED VALUE			281,560
FACTOR			100 %

SKETCH

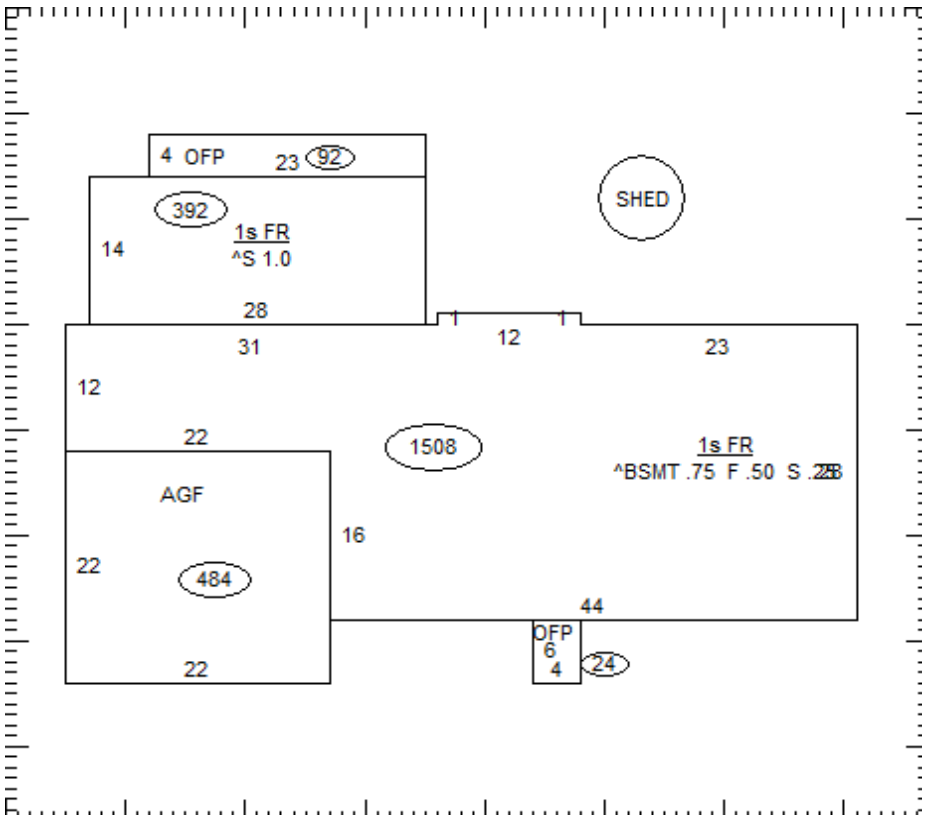

OCCUPANCY	ST.HT	SIZE	AREA	GRADE	PRICE	AGE	REMD	CND	UNADJ VAL	PHYS	PHYS VAL	FUNC	TRUE VAL
DWELLING	1	SK	1,900	C		1961		A	281,560	42	163,300		155,100
1 Shed		10x12	120	C		1961		A		90			0
2													
3													
4													
5													
6													
7													
8													
9													
10													
11													
											TOTAL		155,100

27-450800.0000

COMMENTS

Dwelling has an Economic Factor of 95%