27-439900.0000

**LEITER DANIELLE**
LEITER DANIELLE
906 CANTERBURY DR
CELINA, OH 45822

JEFFERSON TWP-CELINA CORP / CELINA SD
06-31-253-014

**LEGAL INFORMATION**
YORKSHIRE 2ND ADD

LOT#: 40


Property Class: 510
Neighborhood
27502708-03 -
Map: 02
Block: 02
Card: 39
Bk: Pg:

| | OWNERSHIP | ADDRESS | CITY | STATE | ZIP | DATE | AMOUNT | DEED:CONV# | JS | VALID |
|---|---|---|---|---|---|---|---|---|---|---|
| 1 | LEITER DANIELLE | 906 CANTERBURY DR | CELINA | OH | 45822 | 08/26/2020 | 204,500 | WDC : 600 | ☐ | ■ |
| 2 | WATERMAN ROBERT J & JUDY | 906 CANTERBURY DR | CELINA | OH | 45822 | 06/26/1991 | 82,000 | : A : 0 | ☐ | ☐ |
| 3 | | | | | | | 0 | 0 | ☐ | ☐ |

X: ☐ TTO LISTER: DA DATE: 07/25/2005 TIME: 12:00:00 AM ☐ LETTER ☐ LETTER REC'D GIS CODE

| STREET/ROAD | TOPOGRAPHY | PU-UTILITIES-PR | NEIGHBORHOOD | INFLUENCE FACTORS | |
|---|---|---|---|---|---|
| ■ PAVED | ■ LEVEL | ☐ WATER ☐ | ☐ IMPROVING | ☐ A. NO ROAD | ☐ F. RESTRICT |
| ☐ GRAVEL | ☐ HIGH | ☐ SEWER ☐ | ■ STATIC | ☐ B. TOPGRHY | ☐ G. WOOD LT |
| ☐ DIRT | ☐ LOW | ☐ GAS ☐ | ☐ DECLINING | ☐ C. Ex Front | ☐ H. VACANCY |
| ■ SIDEWALKS | ☐ ROLLING | ☐ ELECTRIC ☐ | ☐ OLD | ☐ D. QUANTITY | ☐ I. WATER FRONT |
| ☐ CURBS | ☐ STANDARD | ■ STANDARD | ☐ STANDARD | ☐ E. SZ/SHAPE | ☐ J. OTHER/CDU |

PROPERTY LOCATION
906 CANTERBURY DR, CELINA

COMMENT
TY2022:Net Gen=$2,564.20, Other Assessment=$0.00
DE16 DESKTOP REVIEW//CORR SKETCH
DE22 COR INT INFO PER DATA MAILER

LAND COMPUTATIONS

| LAND TYPE | SIZE | M RATE C | INF | M VALUE C |
|---|---|---|---|---|
| F:Front | F75 D110 | ST425 DP85 ADJ361 | | 27,100 0 |
| | | | TOTAL | 27,100 0 |

VALUATION SUMMARY

| | | | | | | | | | |
|---|---|---|---|---|---|---|---|---|---|
| VALUE YEAR | | 2023 | 2022 | 2020 | 2017 | | | | |
| REASON FOR CHANGE | | RAPP | MISC | RAPP | RAPP | | | | |
| APPRAISED VALUE | LAND | 27,100 | 19,900 | 19,900 | 16,600 | | | | |
| | IMPR | 191,200 | 142,300 | 139,600 | 119,700 | | | | |
| | TOTAL | 218,300 | 162,200 | 159,500 | 136,300 | | | | |
| ASSESSED VALUE | LAND | 9,490 | 6,970 | 6,970 | 5,810 | | | | |
| | IMPR | 66,920 | 49,810 | 48,860 | 41,900 | | | | |
| | TOTAL | 76,410 | 56,780 | 55,830 | 47,710 | | | | |

| OCCUPANCY | EXTERIOR |
|---|---|
| ■ SF ☐ DU ☐ TR | ■ WOOD |
| ☐ CONVERSION | ☐ STUCCO |
| **BUILDING TYPE** | ☐ ALM/VYNL |
| ☐ MOBILE HOME | ☐ CONC BLK |
| ■ BI/TR LEVEL | ☐ METAL |
| ☐ MOD/MAN | ☐ BRICK |
| ☐ _____ | ☐ STONE |

| ROOFING | ROOF TYPE |
|---|---|
| ☐ METAL | ■ GABLE |
| ☐ SLT/TLE | ☐ HIP |
| ■ SHINGLES | ☐ GAMBREL |
| ☐ SHAKES | ☐ MANSARD |
| ☐ COMPOSITE | ☐ FLAT |

| FLOORS | B | 1 | 2 | 3 | U |
|---|---|---|---|---|---|
| CONCRETE | ☐ | ■ | ☐ | ☐ | ☐ |
| WOOD | ☐ | ☐ | ☐ | ☐ | ☐ |
| TILE/COMPO | ☐ | ■ | ■ | ☐ | ☐ |
| CARPET | ☐ | ■ | ■ | ☐ | ☐ |

| INT. FINISH | B | 1 | 2 | 3 | U |
|---|---|---|---|---|---|
| PLASTER/DW | ☐ | ☐ | ■ | ☐ | ☐ |
| PANELING | ☐ | ■ | ☐ | ☐ | ☐ |
| UNFINISHED | ☐ | ☐ | ☐ | ☐ | ☐ |

| ACCOMMODATIONS | | | | | |
|---|---|---|---|---|---|
| # OF ROOMS | | 5 | 3 | | |
| BEDROOMS | | 3 | 1 | | |
| FIREPLACES | | 1 | | | |

| HEAT & AC | B | 1 | 2 | 3 | U |
|---|---|---|---|---|---|
| NO HEAT | ☐ | ☐ | ☐ | ☐ | ☐ |
| CTRL HEAT | ☐ | ■ | ■ | ☐ | ☐ |
| HW/STEAM | ☐ | ☐ | ☐ | ☐ | ☐ |
| ELECTRIC | ☐ | ☐ | ☐ | ☐ | ☐ |
| HEAT PUMP | ☐ | ☐ | ☐ | ☐ | ☐ |
| FLR/WALL | ☐ | ☐ | ☐ | ☐ | ☐ |
| STVE/SPCE | ☐ | ☐ | ☐ | ☐ | ☐ |
| GEOTHERMAL | ☐ | ☐ | ☐ | ☐ | ☐ |
| OUTSIDE | ☐ | ☐ | ☐ | ☐ | ☐ |
| CTRL A/C | ☐ | ■ | ■ | ☐ | ☐ |

| PLUMBING | | | BASE | | ■ |
|---|---|---|---|---|---|
| X FULL BATH | | | 1 | | |
| X HALF BATH | | | | | |
| X FIXTURES | | | 1 | | |

| FLOOR | AREA | CONST | VALUE |
|---|---|---|---|
| 1 | 1116 | FR | 171,110 |
| BI | 1092 | FR | 63,620 |

| | | | |
|---|---|---|---|
| SUBTOTAL | | | 234,730 |
| MULTI-FAMILY # | 0 | | 0 |
| BUILDING TYPE | 100% | | 0 |
| BSMT FINISH | 0 | S.F. | 0 |
| FIREPLACE # | 1 | | 4,400 |
| HEATING | 0 | S.F. | 0 |
| AIR COND | 2,208 | S.F. | 3,640 |
| PLUMBING # | 4 | | 4,840 |
| GARAGES & CARPORTS | | | 12,900 |
| EXTRA FEATURES | | | 3,400 |
| SUBTOTAL | | | 263,910 |
| GRADE FACTOR | | | 115 % |
| UNADJUSTED VALUE | | | 303,500 |
| FACTOR | | | 100 % |

SKETCH

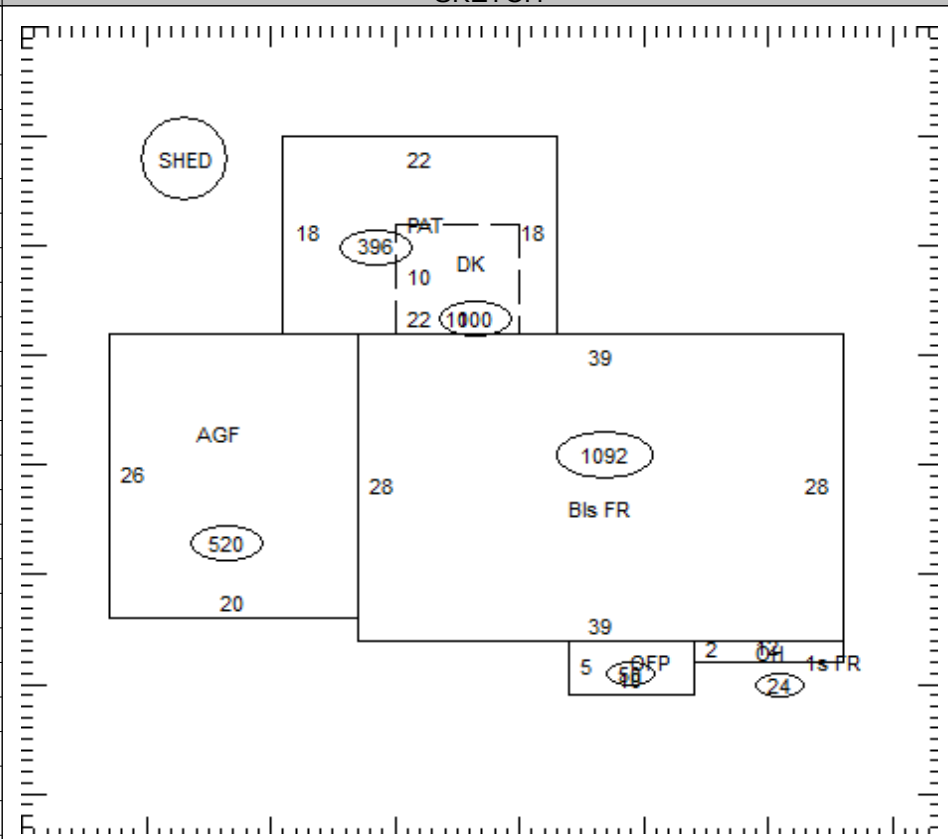


| OCCUPANCY | ST.HT | SIZE | AREA | GRADE | PRICE | AGE | REMD | CND | UNADJ VAL | PHYS | PHYS VAL | FUNC | TRUE VAL |
|---|---|---|---|---|---|---|---|---|---|---|---|---|---|
| DWELLING | 1 | SK | 2,208 | B- | | 1974 | | A | 303,500 | 30 | 212,450 | | 191,200 |
| 1 Shed | | 10x10 | 100 | C | | 2000 | | A | | 37 | | | 0 |
| 2 | | | | | | | | | | | | | |
| 3 | | | | | | | | | | | | | |
| 4 | | | | | | | | | | | | | |
| 5 | | | | | | | | | | | | | |
| 6 | | | | | | | | | | | | | |
| 7 | | | | | | | | | | | | | |
| 8 | | | | | | | | | | | | | |
| 9 | | | | | | | | | | | | | |
| 10 | | | | | | | | | | | | | |
| 11 | | | | | | | | | | | | | |
| | | | | | | | | | | | TOTAL | | 191,200 |

27-439900.0000

COMMENTS

FRAME W M/S
Dwelling has an Economic Factor of 90%