27-305000.0000

FINKE ROSS & KELLI J
FINKE ROSS & KELLI J
610 LINDEN AVE
CELINA, OH 45822

JEFFERSON TWP-CELINA CORP / CELINA SD
06-31-379-006

LEGAL INFORMATION
WOODLAND SUBD
ALSO LOT 44
LOT#: 43

QUALIFIED CREDITS:
HOMESTEAD

Property Class: 510
Neighborhood
27502717-02 -
Map: 02
Block: 09
Card: 51
Bk: Pg:

	OWNERSHIP	ADDRESS	CITY	STATE	ZIP	DATE	AMOUNT	DEED:CONV#	JS	VALID
1	FINKE ROSS & KELLI J	610 LINDEN AVE	CELINA	OH	45822	05/19/2023	325,000	WDC : 277	☐	■
2	STUCKMAN RALPH E & JANE S	610 LINDEN AVE	CELINA	OH	45822		0	: 0	☐	☐
3							0	0	☐	☐

X: ☐ TTO LISTER: DATE: 08/08/2011 TIME: 12:00:00 AM ☐ LETTER ☐ LETTER REC'D GIS CODE

STREET/ROAD	TOPOGRAPHY	PU-UTILITIES-PR	NEIGHBORHOOD	INFLUENCE FACTORS	
■ PAVED	■ LEVEL	☐ WATER ☐	■ IMPROVING	☐ A. NO ROAD	☐ F. RESTRICT
☐ GRAVEL	☐ HIGH	☐ SEWER ☐	☐ STATIC	☐ B. TOPGRHY	☐ G. WOOD LT
☐ DIRT	☐ LOW	☐ GAS ☐	☐ DECLINING	☐ C. Ex Front	☐ H. VACANCY
■ SIDEWALKS	☐ ROLLING	☐ ELECTRIC ☐	☐ OLD	☐ D. QUANTITY	☐ I. WATER FRONT
☐ CURBS	☐ STANDARD	■ STANDARD	☐ STANDARD	☐ E. SZ/SHAPE	☐ J. OTHER/CDU

PROPERTY LOCATION
610 LINDEN AVE, CELINA

COMMENT
Tax Incentive Exempt Parcel: 27-305000.000A*
(TY2022 L=0; B=0; T=0)
TY2022:Net Gen=$3,441.20, Other Assessment=$0.00
DE15 tto/ cor sk per data mailer
DE11 CORR SK
DE11 ABMNT EXP
DE09 CORR PLMG & FP PER DATA MAILER

LAND COMPUTATIONS

LAND TYPE	SIZE	M RATE C	INF	M VALUE C
F:Front	F60 D123	ST395 DP90 ADJ356		21,400 0
F:Front	F60 D123	ST395 DP90 ADJ356		21,400 0
			TOTAL	42,800 0

VALUATION SUMMARY

VALUE YEAR		2023	2020	2017					
REASON FOR CHANGE		RAPP	RAPP	RAPP					
APPRAISED VALUE	LAND	42,800	27,400	23,800					
	IMPR	286,300	215,300	177,100					
	TOTAL	329,100	242,700	200,900					
ASSESSED VALUE	LAND	14,980	9,590	8,330					
	IMPR	100,210	75,360	61,990					
	TOTAL	115,190	84,950	70,320					

OCCUPANCY	EXTERIOR
■ SF ☐ DU ☐ TR	■ WOOD
☐ CONVERSION	☐ STUCCO
BUILDING TYPE	☐ ALM/VYNL
☐ MOBILE HOME	☐ CONC BLK
☐ BI/TR LEVEL	☐ METAL
☐ MOD/MAN	☐ BRICK
☐ _____	☐ STONE

ROOFING	ROOF TYPE
☐ METAL	■ GABLE
☐ SLT/TLE	☐ HIP
■ SHINGLES	☐ GAMBREL
☐ SHAKES	☐ MANSARD
☐ COMPOSITE	☐ FLAT

FLOORS	B	1	2	3	U
CONCRETE	■	☐	☐	☐	☐
WOOD	☐	☐	☐	☐	☐
TILE/COMPO	☐	■	☐	☐	☐
CARPET	☐	■	☐	☐	☐

INT. FINISH	B	1	2	3	U
PLASTER/DW	☐	■	■	☐	☐
PANELING	☐	☐	☐	☐	☐
UNFINISHED	■	☐	☐	☐	☐

ACCOMMODATIONS					
# OF ROOMS		6	5		
BEDROOMS			4		
FIREPLACES		1			

HEAT & AC	B	1	2	3	U
NO HEAT	☐	☐	☐	☐	☐
CTRL HEAT	☐	■	■	☐	☐
HW/STEAM	☐	☐	☐	☐	☐
ELECTRIC	☐	☐	☐	☐	☐
HEAT PUMP	☐	☐	☐	☐	☐
FLR/WALL	☐	☐	☐	☐	☐
STVE/SPCE	☐	☐	☐	☐	☐
GEOTHERMAL	☐	☐	☐	☐	☐
OUTSIDE	☐	☐	☐	☐	☐
CTRL A/C	☐	■	■	☐	☐

PLUMBING					BASE ■
X FULL BATH		1			
X HALF BATH		1			
X FIXTURES		2			

FLOOR	AREA	CONST	VALUE
1	1950	FR	230,260
2ND	991	FR	56,170
BSMT	912		13,040
SUBTOTAL			299,470
MULTI-FAMILY #	0		0
BUILDING TYPE	100%		0
BSMT FINISH	0	S.F.	0
FIREPLACE #	1		4,400
HEATING	0	S.F.	0
AIR COND	2,941	S.F.	4,860
PLUMBING #	7		8,470
GARAGES & CARPORTS			14,300
EXTRA FEATURES			4,900
SUBTOTAL			336,400
GRADE FACTOR			115 %
UNADJUSTED VALUE			386,860
FACTOR			100 %

SKETCH

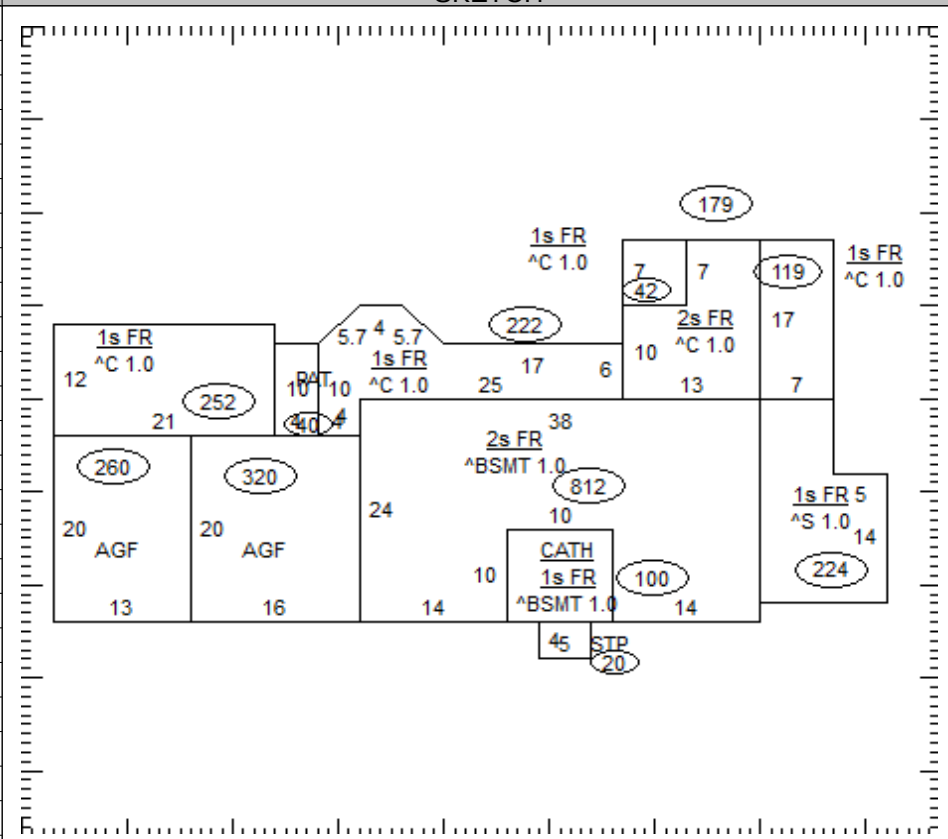

OCCUPANCY	ST.HT	SIZE	AREA	GRADE	PRICE	AGE	REMD	CND	UNADJ VAL	PHYS	PHYS VAL	FUNC	TRUE VAL
DWELLING	2	SK	2,941	B-		1951	1999	A	386,860	26	286,280		286,300
1													
2													
3													
4													
5													
6													
7													
8													
9													
10													
11													
											TOTAL		286,300

27-305000.0000

COMMENTS

Dwelling has an Economic Factor of 100%