27-257900.0000

LITTLE BOXES LLC
LITTLE BOXES LLC
541 E LIVINGSTON ST
CELINA, OH 45822

JEFFERSON TWP-CELINA CORP / CELINA SD
09-06-132-007

LEGAL INFORMATION
PAX ADD
ALSO E SD LOT 2
LOT#: 1

Property Class: 510
Neighborhood
27502720-01 -
Map: 05
Block: 03
Card: 71
Bk: Pg:

	OWNERSHIP	ADDRESS	CITY	STATE	ZIP	DATE	AMOUNT	DEED:CONV#	JS	VALID
1	LITTLE BOXES LLC	541 E LIVINGSTON ST	CELINA	OH	45822	07/17/2020	112,500	WDC : 465	☐	■
2	TRISEL MICHELLE	1368 MICHAEL AVE	CELINA	OH	45822	06/08/2020	0	QCE : X : 0	☐	☐
3	SALAZAR BENJAMIN &	541 E LIVINGSTON ST	CELINA	OH	45822	07/07/2006	84,500	WDC : A : 543	☐	☐

X: ☐ TTO LISTER: DATE: 03/17/2011 TIME: 12:00:00 AM ☐ LETTER ☐ LETTER REC'D GIS CODE

STREET/ROAD	TOPOGRAPHY	PU-UTILITIES-PR	NEIGHBORHOOD	INFLUENCE FACTORS	
☐ PAVED	☐ LEVEL	☐ WATER ☐	☐ IMPROVING	☐ A. NO ROAD	☐ F. RESTRICT
☐ GRAVEL	☐ HIGH	☐ SEWER ☐	☐ STATIC	☐ B. TOPGRHY	☐ G. WOOD LT
☐ DIRT	☐ LOW	☐ GAS ☐	☐ DECLINING	☐ C. Ex Front	☐ H. VACANCY
☐ SIDEWALKS	☐ ROLLING	☐ ELECTRIC ☐	☐ OLD	☐ D. QUANTITY	☐ I. WATER FRONT
☐ CURBS	☐ STANDARD	■ STANDARD	☐ STANDARD	☐ E. SZ/SHAPE	☐ J. OTHER/CDU

PROPERTY LOCATION
541 E LIVINGSTON ST, CELINA

COMMENT
TY2022:Net Gen=$2,267.36, Other Assessment=$0.00
541, 541 1/2 LIVINGSTON ST
DE11 CORR FRONT OF DWLG

LAND COMPUTATIONS

LAND TYPE	SIZE	M RATE C	INF	M VALUE C
F:Front	F51 D151	ST380 DP100 ADJ380		19,400 0
F:Front	F16 D49	ST380 DP56 ADJ213		3,400 0
			TOTAL	22,800 0

VALUATION SUMMARY

VALUE YEAR		2023	2020	2017	2017				
REASON FOR CHANGE		RAPP	RAPP	RAPP	MISC				
APPRAISED VALUE	LAND	22,800	14,100	11,400	11,400				
	IMPR	176,800	126,200	97,100	114,300				
	TOTAL	199,600	140,300	108,500	125,700				
ASSESSED VALUE	LAND	7,980	4,940	3,990	3,990				
	IMPR	61,880	44,170	33,990	40,010				
	TOTAL	69,860	49,110	37,980	44,000				

OCCUPANCY	EXTERIOR
☐SF ■DU ☐TR	■ WOOD
☐CONVERSION	☐ STUCCO
BUILDING TYPE	☐ ALM/VYNL
☐ MOBILE HOME	☐ CONC BLK
☐ BI/TR LEVEL	☐ METAL
☐ MOD/MAN	☐ BRICK
☐ _____	☐ STONE

ROOFING	ROOF TYPE
☐ METAL	■ GABLE
☐ SLT/TLE	☐ HIP
■ SHINGLES	☐ GAMBREL
☐ SHAKES	☐ MANSARD
☐ COMPOSITE	☐ FLAT

FLOORS	B	1	2	3	U
CONCRETE	■	☐	☐	☐	☐
WOOD	☐	☐	☐	☐	☐
TILE/COMPO	☐	■	■	☐	☐
CARPET	☐	■	■	☐	☐

INT. FINISH	B	1	2	3	U
PLASTER/DW	☐	■	■	☐	☐
PANELING	☐	☐	☐	☐	☐
UNFINISHED	■	☐	☐	☐	☐

ACCOMMODATIONS					
# OF ROOMS		5	5		
BEDROOMS		2	2		
FIREPLACES		1			

HEAT & AC	B	1	2	3	U
NO HEAT	☐	☐	☐	☐	☐
CTRL HEAT	☐	■	■	☐	☐
HW/STEAM	☐	☐	☐	☐	☐
ELECTRIC	☐	☐	☐	☐	☐
HEAT PUMP	☐	☐	☐	☐	☐
FLR/WALL	☐	☐	☐	☐	☐
STVE/SPCE	☐	☐	☐	☐	☐
GEOTHERMAL	☐	☐	☐	☐	☐
OUTSIDE	☐	☐	☐	☐	☐
CTRL A/C	☐	☐	☐	☐	☐

PLUMBING	BASE ■			
X FULL BATH		1		
X HALF BATH		1		
X FIXTURES				

FLOOR	AREA	CONST	VALUE
1	1542	FR	206,060
2ND	1353	FR	86,780
BSMT	1211		17,320
SUBTOTAL			310,160
MULTI-FAMILY #		1	2,500
BUILDING TYPE		100%	0
BSMT FINISH		0 S.F.	0
FIREPLACE #		1	4,400
HEATING		0 S.F.	0
AIR COND		0 S.F.	0
PLUMBING #		5	6,050
GARAGES & CARPORTS			10,900
EXTRA FEATURES			6,200
SUBTOTAL			340,210
GRADE FACTOR			105 %
UNADJUSTED VALUE			357,220
FACTOR			100 %

SKETCH

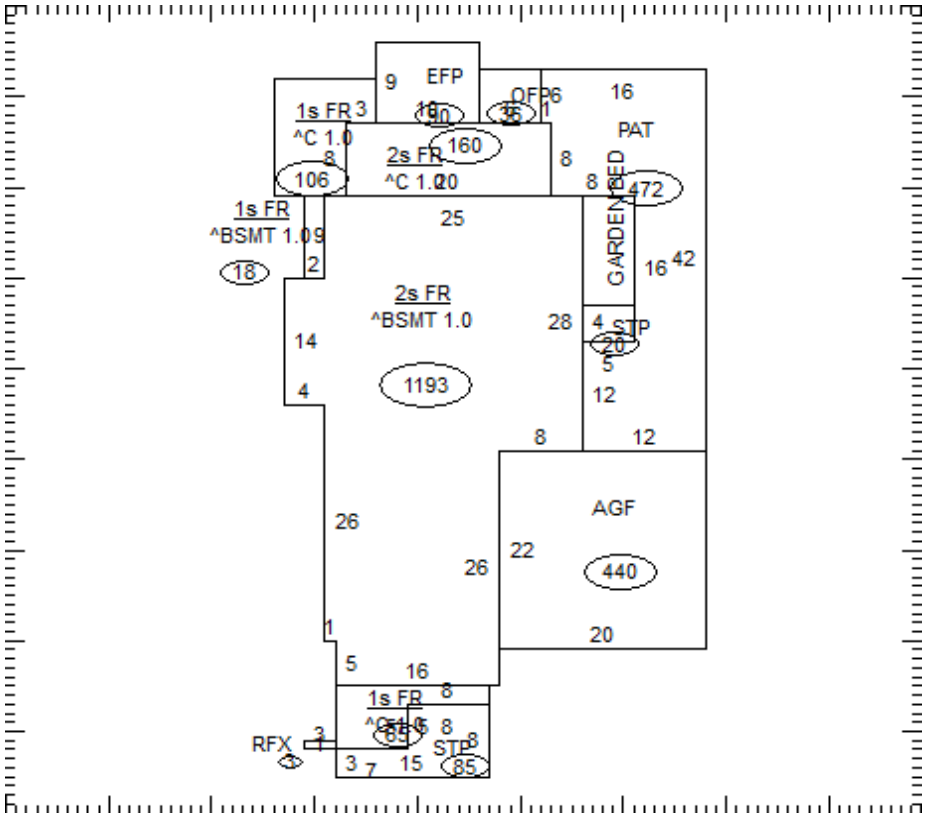

OCCUPANCY	ST.HT	SIZE	AREA	GRADE	PRICE	AGE	REMD	CND	UNADJ VAL	PHYS	PHYS VAL	FUNC	TRUE VAL
DWELLING	2	SK	2,895	C+		1942		A	357,220	45	196,470		176,800
1													
2													
3													
4													
5													
6													
7													
8													
9													
10													
11													
											TOTAL		176,800

27-257900.0000

COMMENTS

Dwelling has an Economic Factor of 90%

27-257900.0000

LITTLE BOXES LLC
LITTLE BOXES LLC
541 E LIVINGSTON ST
CELINA, OH 45822

JEFFERSON TWP-CELINA CORP / CELINA SD
09-06-132-007

LEGAL INFORMATION
PAX ADD
ALSO E SD LOT 2
LOT#: 1

Property Class: 510
Neighborhood
27502720-01 -
Map: 05
Block: 03
Card: 71
Bk: Pg:

	OWNERSHIP	ADDRESS	CITY	STATE	ZIP	DATE	AMOUNT	DEED:CONV#	JS	VALID
1	HONE CAROL JEAN	541 E LIVINGSTON ST	CELINA	OH	45822		0	: 0	☐	☐
2							0	0	☐	☐
3							0	0	☐	☐

X: ☐ TTO LISTER: DATE: 03/17/2011 TIME: 12:00:00 AM ☐ LETTER ☐ LETTER REC'D GIS CODE

STREET/ROAD	TOPOGRAPHY	PU-UTILITIES-PR	NEIGHBORHOOD	INFLUENCE FACTORS	
☐ PAVED	☐ LEVEL	☐ WATER ☐	☐ IMPROVING	☐ A. NO ROAD	☐ F. RESTRICT
☐ GRAVEL	☐ HIGH	☐ SEWER ☐	☐ STATIC	☐ B. TOPGRHY	☐ G. WOOD LT
☐ DIRT	☐ LOW	☐ GAS ☐	☐ DECLINING	☐ C. Ex Front	☐ H. VACANCY
☐ SIDEWALKS	☐ ROLLING	☐ ELECTRIC ☐	☐ OLD	☐ D. QUANTITY	☐ I. WATER FRONT
☐ CURBS	☐ STANDARD	■ STANDARD	☐ STANDARD	☐ E. SZ/SHAPE	☐ J. OTHER/CDU

PROPERTY LOCATION
541 E LIVINGSTON ST, CELINA

COMMENT

LAND COMPUTATIONS

LAND TYPE	SIZE	M RATE C	INF	M VALUE C
			TOTAL	22,800 0

VALUATION SUMMARY

VALUE YEAR									
REASON FOR CHANGE									
APPRAISED VALUE	LAND								
	IMPR								
	TOTAL								
ASSESSED VALUE	LAND								
	IMPR								
	TOTAL								

OCCUPANCY	EXTERIOR
☐SF ☐DU ☐TR	☐ WOOD
☐CONVERSION	☐ STUCCO
BUILDING TYPE	☐ ALM/VYNL
☐ MOBILE HOME	☐ CONC BLK
☐ BI/TR LEVEL	☐ METAL
☐ MOD/MAN	☐ BRICK
☐ _____	☐ STONE

ROOFING	ROOF TYPE
☐ METAL	☐ GABLE
☐ SLT/TLE	☐ HIP
☐ SHINGLES	☐ GAMBREL
☐ SHAKES	☐ MANSARD
☐ COMPOSITE	☐ FLAT

FLOORS	B	1	2	3	U
CONCRETE	☐	☐	☐	☐	☐
WOOD	☐	☐	☐	☐	☐
TILE/COMPO	☐	☐	☐	☐	☐
CARPET	☐	☐	☐	☐	☐

INT. FINISH	B	1	2	3	U
PLASTER/DW	☐	☐	☐	☐	☐
PANELING	☐	☐	☐	☐	☐
UNFINISHED	☐	☐	☐	☐	☐

ACCOMMODATIONS					
# OF ROOMS					
BEDROOMS					
FIREPLACES					

HEAT & AC	B	1	2	3	U
NO HEAT	☐	☐	☐	☐	☐
CTRL HEAT	☐	☐	☐	☐	☐
HW/STEAM	☐	☐	☐	☐	☐
ELECTRIC	☐	☐	☐	☐	☐
HEAT PUMP	☐	☐	☐	☐	☐
FLR/WALL	☐	☐	☐	☐	☐
STVE/SPCE	☐	☐	☐	☐	☐
GEOTHERMAL	☐	☐	☐	☐	☐
OUTSIDE	☐	☐	☐	☐	☐
CTRL A/C	☐	☐	☐	☐	☐

PLUMBING	BASE ☐				
X FULL BATH					
X HALF BATH					
X FIXTURES					

FLOOR	AREA	CONST	VALUE

SUBTOTAL		0
MULTI-FAMILY #	0	0
BUILDING TYPE	000%	0
BSMT FINISH	0 S.F.	0
FIREPLACE #	0	0
HEATING	0 S.F.	0
AIR COND	0 S.F.	0
PLUMBING #	0	0
GARAGES & CARPORTS		0
EXTRA FEATURES		0
SUBTOTAL		0
GRADE FACTOR		%
UNADJUSTED VALUE		0
FACTOR		%

SKETCH

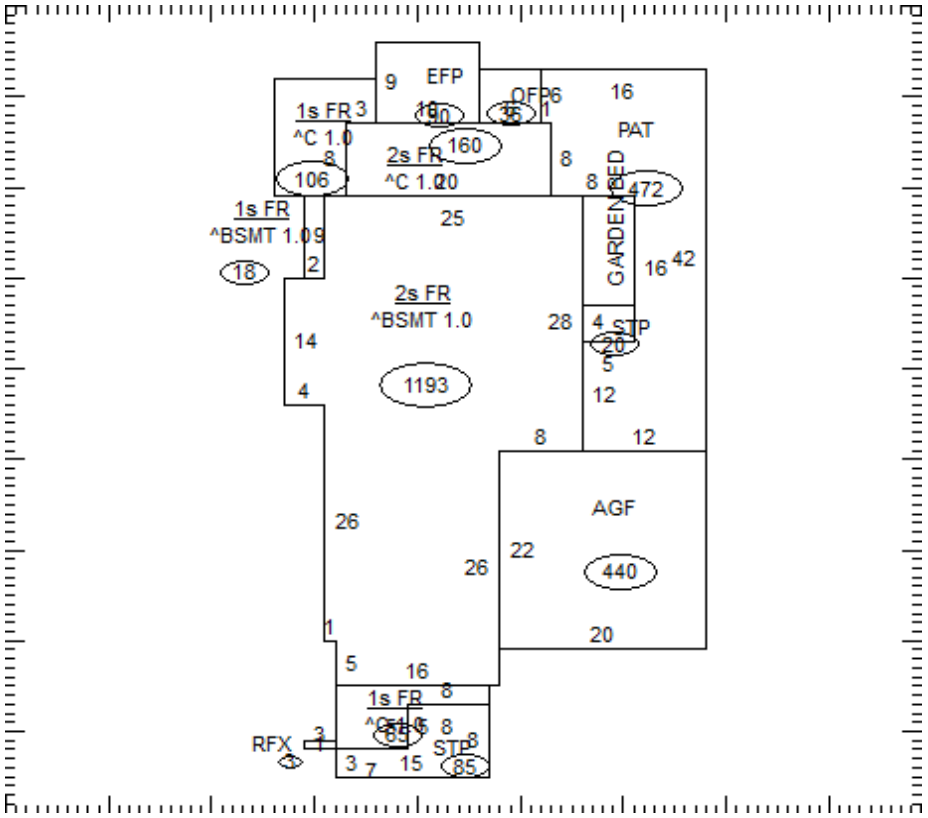

OCCUPANCY	ST.HT	SIZE	AREA	GRADE	PRICE	AGE	REMD	CND	UNADJ VAL	PHYS	PHYS VAL	FUNC	TRUE VAL
DWELLING		SK											
1													
2													
3													
4													
5													
6													
7													
8													
9													
10													
11													
												TOTAL	0

27-257900.0000

COMMENTS