27-143500.0100

JEFFERSON TWP-CELINA CORP / CELINA SD
08-01-204-003

Property Class: 520
Neighborhood
27502703-01 -
Map: 04
Block: 04
Card: 04
Bk: Pg:

AMSTUTZ PROPERTIES LLC
AMSTUTZ PROPERTIES LLC
506 E WAYNE ST
CELINA, OH 45822

LEGAL INFORMATION
RILEY ADD
NE COR OL 1
RTS: 002-06-01

	OWNERSHIP	ADDRESS	CITY	STATE	ZIP	DATE	AMOUNT	DEED:CONV#	JS	VALID
1	AMSTUTZ PROPERTIES LLC	506 E WAYNE ST	CELINA	OH	45822	08/16/2019	46,000	WDC : 559	☐	■
2	WELDTEC LTD	325 W LEONA ST	CELINA	OH	45822	09/02/2016	32,400	WDC : 610	☐	■
3	EYINK REVOCABLE LIVING	5580 JOHNSTON RD	CELINA	OH	45822	01/20/2006	0	QCE : X : 0	☐	☐

X: ☐ TTO LISTER: DATE: 02/17/2011 TIME: 12:00:00 AM ☐ LETTER ☐ LETTER REC'D GIS CODE

STREET/ROAD	TOPOGRAPHY	PU-UTILITIES-PR	NEIGHBORHOOD	INFLUENCE FACTORS	
■ PAVED	■ LEVEL	☐ WATER ☐	☐ IMPROVING	☐ A. NO ROAD	☐ F. RESTRICT
☐ GRAVEL	☐ HIGH	☐ SEWER ☐	■ STATIC	☐ B. TOPGRHY	☐ G. WOOD LT
☐ DIRT	☐ LOW	☐ GAS ☐	☐ DECLINING	☐ C. Ex Front	☐ H. VACANCY
■ SIDEWALKS	☐ ROLLING	☐ ELECTRIC ☐	☐ OLD	☐ D. QUANTITY	☐ I. WATER FRONT
☐ CURBS	☐ STANDARD	■ STANDARD	☐ STANDARD	☐ E. SZ/SHAPE	☐ J. OTHER/CDU

PROPERTY LOCATION
121 N BRANDON AVE, CELINA

COMMENT
TY2022:Net Gen=$1,604.82, Other Assessment=$0.00
DE11 CORR BW DEMTN, ADD STP
DE16 DESKTOP RVW CHG: COR SKETCH
DE22 ADD HALF BATH PER DATA MAILER
TriDwell=75

LAND COMPUTATIONS

LAND TYPE	SIZE	M RATE C	INF	M VALUE C
F:Front	F50 D90	ST350 DP77 ADJ270		13,500 0
			TOTAL	13,500 0

VALUATION SUMMARY

VALUE YEAR		2023	2022	2020	2017				
REASON FOR CHANGE		RAPP	MISC	RAPP	RAPP				
APPRAISED VALUE	LAND	13,500	6,200	6,200	7,300				
	IMPR	137,000	93,100	91,900	77,600				
	TOTAL	150,500	99,300	98,100	84,900				
ASSESSED VALUE	LAND	4,730	2,170	2,170	2,560				
	IMPR	47,950	32,590	32,170	27,160				
	TOTAL	52,680	34,760	34,340	29,720				

OCCUPANCY	EXTERIOR
☐SF ■DU ☐TR	■ WOOD
☐CONVERSION	☐ STUCCO
BUILDING TYPE	☐ ALM/VYNL
☐ MOBILE HOME	☐ CONC BLK
☐ BI/TR LEVEL	☐ METAL
☐ MOD/MAN	☐ BRICK
☐ _____	☐ STONE

ROOFING	ROOF TYPE
☐ METAL	■ GABLE
☐ SLT/TLE	☐ HIP
■ SHINGLES	☐ GAMBREL
☐ SHAKES	☐ MANSARD
☐ COMPOSITE	☐ FLAT

FLOORS	B	1	2	3	U
CONCRETE	■	☐	☐	☐	☐
WOOD	☐	■	■	■	☐
TILE/COMPO	☐	☐	☐	☐	☐
CARPET	☐	☐	☐	☐	☐

INT. FINISH	B	1	2	3	U
PLASTER/DW	☐	■	■	■	☐
PANELING	☐	☐	☐	☐	☐
UNFINISHED	■	☐	☐	☐	☐

ACCOMMODATIONS					
# OF ROOMS		5		2	
BEDROOMS		1		2	
FIREPLACES					

HEAT & AC	B	1	2	3	U
NO HEAT	☐	☐	☐	☐	☐
CTRL HEAT	☐	■	■	■	☐
HW/STEAM	☐	☐	☐	☐	☐
ELECTRIC	☐	☐	☐	☐	☐
HEAT PUMP	☐	☐	☐	☐	☐
FLR/WALL	☐	☐	☐	☐	☐
STVE/SPCE	☐	☐	☐	☐	☐
GEOTHERMAL	☐	☐	☐	☐	☐
OUTSIDE	☐	☐	☐	☐	☐
CTRL A/C	☐	☐	☐	☐	☐

PLUMBING		BASE ■			
X FULL BATH		1		1	
X HALF BATH		1			
X FIXTURES					

FLOOR	AREA	CONST	VALUE
1	1335	FR	190,850
.5	380	FR	33,740
2ND	400	FR	27,450
BSMT	571		8,170

SUBTOTAL		260,210
MULTI-FAMILY #	1	2,500
BUILDING TYPE	100%	0
BSMT FINISH	0 S.F.	0
FIREPLACE #	0	0
HEATING	0 S.F.	0
AIR COND	0 S.F.	0
PLUMBING #	8	9,680
GARAGES & CARPORTS		0
EXTRA FEATURES		2,400
SUBTOTAL		274,790
GRADE FACTOR		100 %
UNADJUSTED VALUE		206,090
FACTOR		100 %

SKETCH

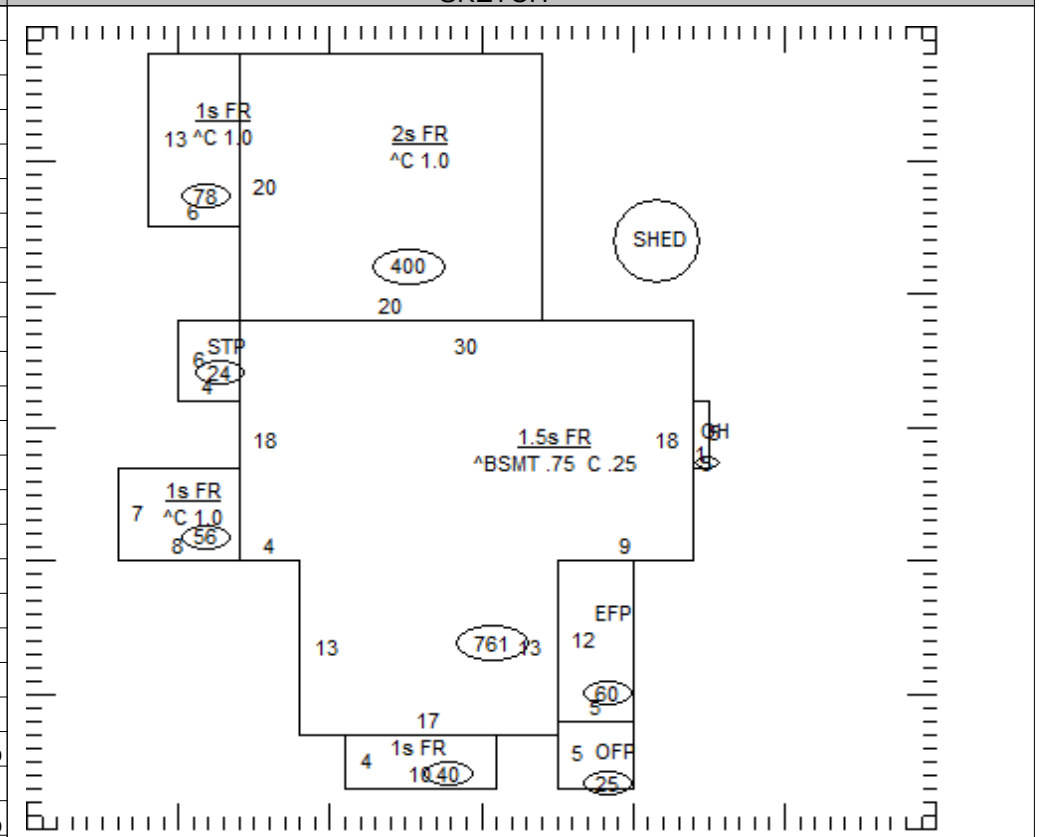

OCCUPANCY	ST.HT	SIZE	AREA	GRADE	PRICE	AGE	REMD	CND	UNADJ VAL	PHYS	PHYS VAL	FUNC	TRUE VAL
DWELLING	2	SK	2,115	C		1947	1997	A	206,090	30	144,260		137,000
1 Shed		8x10	80	C		1990		A		57			0
2													
3													
4													
5													
6													
7													
8													
9													
10													
11													
											TOTAL		137,000

27-143500.0100

COMMENTS

BRANDON/LIVINGSTON ST
Dwelling has an Economic Factor of 95%

27-143500.0100

AMSTUTZ PROPERTIES LLC
AMSTUTZ PROPERTIES LLC
506 E WAYNE ST
CELINA, OH 45822

JEFFERSON TWP-CELINA CORP / CELINA SD
08-01-204-003

LEGAL INFORMATION
RILEY ADD
NE COR OL 1
RTS: 002-06-01

Property Class: 520
Neighborhood
27502703-01 -
Map: 04
Block: 04
Card: 04
Bk: Pg:

	OWNERSHIP	ADDRESS	CITY	STATE	ZIP	DATE	AMOUNT	DEED:CONV#	JS	VALID
1	EYINK DAVID L & DIANA J	5580 JOHNSTON RD	CELINA	OH	45822	06/01/1993	64,000	: A : 0	☐	■
2							0	0	☐	☐
3							0	0	☐	☐

X: ☐ TTO LISTER: DATE: 02/17/2011 TIME: 12:00:00 AM ☐ LETTER ☐ LETTER REC'D GIS CODE

STREET/ROAD	TOPOGRAPHY	PU-UTILITIES-PR	NEIGHBORHOOD	INFLUENCE FACTORS	
■ PAVED	■ LEVEL	☐ WATER ☐	☐ IMPROVING	☐ A. NO ROAD	☐ F. RESTRICT
☐ GRAVEL	☐ HIGH	☐ SEWER ☐	■ STATIC	☐ B. TOPGRHY	☐ G. WOOD LT
☐ DIRT	☐ LOW	☐ GAS ☐	☐ DECLINING	☐ C. Ex Front	☐ H. VACANCY
■ SIDEWALKS	☐ ROLLING	☐ ELECTRIC ☐	☐ OLD	☐ D. QUANTITY	☐ I. WATER FRONT
☐ CURBS	☐ STANDARD	■ STANDARD	☐ STANDARD	☐ E. SZ/SHAPE	☐ J. OTHER/CDU

PROPERTY LOCATION
121 N BRANDON AVE, CELINA

COMMENT

LAND COMPUTATIONS

LAND TYPE	SIZE	M RATE C	INF	M VALUE C
			TOTAL	13,500 0

VALUATION SUMMARY

VALUE YEAR									
REASON FOR CHANGE									
APPRAISED VALUE	LAND								
	IMPR								
	TOTAL								
ASSESSED VALUE	LAND								
	IMPR								
	TOTAL								

OCCUPANCY	EXTERIOR
☐SF ☐DU ☐TR	☐ WOOD
☐CONVERSION	☐ STUCCO
BUILDING TYPE	☐ ALM/VYNL
☐ MOBILE HOME	☐ CONC BLK
☐ BI/TR LEVEL	☐ METAL
☐ MOD/MAN	☐ BRICK
☐ _____	☐ STONE

ROOFING	ROOF TYPE
☐ METAL	☐ GABLE
☐ SLT/TLE	☐ HIP
☐ SHINGLES	☐ GAMBREL
☐ SHAKES	☐ MANSARD
☐ COMPOSITE	☐ FLAT

FLOORS	B	1	2	3	U
CONCRETE	☐	☐	☐	☐	☐
WOOD	☐	☐	☐	☐	☐
TILE/COMPO	☐	☐	☐	☐	☐
CARPET	☐	☐	☐	☐	☐

INT. FINISH	B	1	2	3	U
PLASTER/DW	☐	☐	☐	☐	☐
PANELING	☐	☐	☐	☐	☐
UNFINISHED	☐	☐	☐	☐	☐

ACCOMMODATIONS					
# OF ROOMS					
BEDROOMS					
FIREPLACES					

HEAT & AC	B	1	2	3	U
NO HEAT	☐	☐	☐	☐	☐
CTRL HEAT	☐	☐	☐	☐	☐
HW/STEAM	☐	☐	☐	☐	☐
ELECTRIC	☐	☐	☐	☐	☐
HEAT PUMP	☐	☐	☐	☐	☐
FLR/WALL	☐	☐	☐	☐	☐
STVE/SPCE	☐	☐	☐	☐	☐
GEOTHERMAL	☐	☐	☐	☐	☐
OUTSIDE	☐	☐	☐	☐	☐
CTRL A/C	☐	☐	☐	☐	☐

PLUMBING					BASE ☐
X FULL BATH					
X HALF BATH					
X FIXTURES					

FLOOR	AREA	CONST	VALUE

SUBTOTAL		0
MULTI-FAMILY #	0	0
BUILDING TYPE	000%	0
BSMT FINISH	0 S.F.	0
FIREPLACE #	0	0
HEATING	0 S.F.	0
AIR COND	0 S.F.	0
PLUMBING #	0	0
GARAGES & CARPORTS		0
EXTRA FEATURES		0
SUBTOTAL		0
GRADE FACTOR		%
UNADJUSTED VALUE		0
FACTOR		%

SKETCH

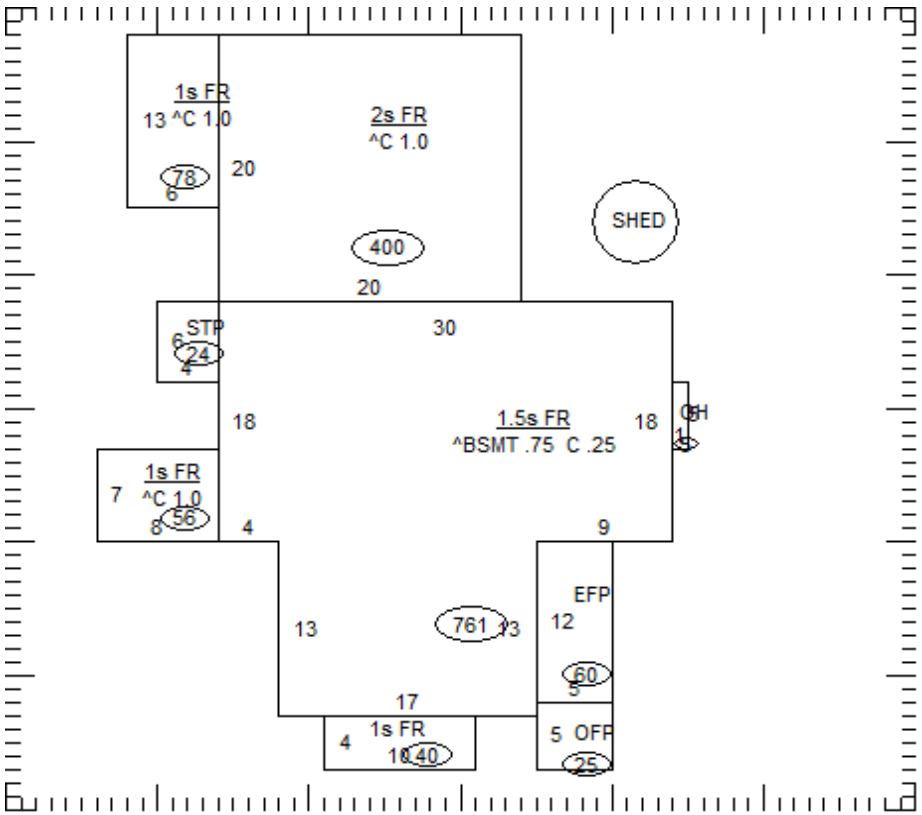

OCCUPANCY	ST.HT	SIZE	AREA	GRADE	PRICE	AGE	REMD	CND	UNADJ VAL	PHYS	PHYS VAL	FUNC	TRUE VAL
DWELLING		SK											
1													
2													
3													
4													
5													
6													
7													
8													
9													
10													
11													
												TOTAL	0

27-143500.0100

COMMENTS