27-118400.0000

SIEFRING BRIAN & SANDRA
SIEFRING BRIAN & SANDRA
3400 SIEGRIST JUTTE RD
COLDWATER, OH 45828

JEFFERSON TWP-CELINA CORP / CELINA SD
08-01-276-006

LEGAL INFORMATION
OLD PLAT

LOT#: 403

Property Class: 530
Neighborhood
27502720-01 -
Map: 04
Block: 07
Card: 29
Bk: Pg:

	OWNERSHIP	ADDRESS	CITY	STATE	ZIP	DATE	AMOUNT	DEED:CONV#	JS	VALID
1	SIEFRING BRIAN & SANDRA	3400 SIEGRIST JUTTE RD	COLDWATER	OH	45828	02/08/2019	150,000	WDC : 70	☐	■
2	RODRIGUEZ JOSEPH L	9984 US RTE 127	MENDON	OH	45862	01/31/2005	15,000	WDC : A : 0	☐	■
3	MERCER SAVINGS BANK	217 W MARKET ST	CELINA	OH	45822	05/11/2004	18,000	SHC : A : 0	☐	■

X: ☐ TTO LISTER: BTC DATE: 08/08/2011 TIME: 12:00:00 AM ☐ LETTER ☐ LETTER REC'D GIS CODE

STREET/ROAD	TOPOGRAPHY	PU-UTILITIES-PR	NEIGHBORHOOD	INFLUENCE FACTORS	
■ PAVED	■ LEVEL	☐ WATER ☐	☐ IMPROVING	☐ A. NO ROAD	☐ F. RESTRICT
☐ GRAVEL	☐ HIGH	☐ SEWER ☐	■ STATIC	☐ B. TOPGRHY	☐ G. WOOD LT
☐ DIRT	☐ LOW	☐ GAS ☐	☐ DECLINING	☐ C. Ex Front	☐ H. VACANCY
■ SIDEWALKS	☐ ROLLING	☐ ELECTRIC ☐	☐ OLD	☐ D. QUANTITY	☐ I. WATER FRONT
☐ CURBS	☐ STANDARD	■ STANDARD	☐ STANDARD	☐ E. SZ/SHAPE	☐ J. OTHER/CDU

PROPERTY LOCATION
321 W FAYETTE ST

COMMENT
TY2022:Net Gen=$1,633.92, Other Assessment=$0.00
DE11 RMV INC
DE10 ALLOW 10% INC
DE09 LOWER CDU ON HSE
DE08 CHG TO AVE COND/ALLOW 33% FNC/2
APTS STILL NOT READY FOR OCC'Y
DE16 DESKTOP RVW CHG: COR FLOORS
TriDwell=75

LAND COMPUTATIONS

LAND TYPE	SIZE	M RATE C	INF	M VALUE C
F:Front	F66 D132	ST380 DP94 ADJ357		23,600 0
			TOTAL	23,600 0

VALUATION SUMMARY

VALUE YEAR		2023	2020	2017					
REASON FOR CHANGE		RAPP	RAPP	RAPP					
APPRAISED VALUE	LAND	23,600	10,000	11,800					
	IMPR	134,300	91,100	65,200					
	TOTAL	157,900	101,100	77,000					
ASSESSED VALUE	LAND	8,260	3,500	4,130					
	IMPR	47,010	31,890	22,820					
	TOTAL	55,270	35,390	26,950					

OCCUPANCY	EXTERIOR
☐SF ☐DU ■TR	■ WOOD
☐CONVERSION	☐ STUCCO
BUILDING TYPE	☐ ALM/VYNL
☐ MOBILE HOME	☐ CONC BLK
☐ BI/TR LEVEL	☐ METAL
☐ MOD/MAN	☐ BRICK
☐ _____	☐ STONE

ROOFING	ROOF TYPE
☐ METAL	■ GABLE
☐ SLT/TLE	☐ HIP
■ SHINGLES	☐ GAMBREL
☐ SHAKES	☐ MANSARD
☐ COMPOSITE	☐ FLAT

FLOORS	B	1	2	3	U
CONCRETE	■	☐	☐	☐	☐
WOOD	☐	■	■	☐	☐
TILE/COMPO	☐	☐	☐	☐	☐
CARPET	☐	☐	☐	☐	☐

INT. FINISH	B	1	2	3	U
PLASTER/DW	☐	■	■	☐	☐
PANELING	☐	☐	☐	☐	☐
UNFINISHED	■	☐	☐	☐	☐

ACCOMMODATIONS					
# OF ROOMS		5	4		
BEDROOMS			2		
FIREPLACES					

HEAT & AC	B	1	2	3	U
NO HEAT	☐	☐	☐	☐	☐
CTRL HEAT	☐	■	■	☐	☐
HW/STEAM	☐	☐	☐	☐	☐
ELECTRIC	☐	☐	☐	☐	☐
HEAT PUMP	☐	☐	☐	☐	☐
FLR/WALL	☐	☐	☐	☐	☐
STVE/SPCE	☐	☐	☐	☐	☐
GEOTHERMAL	☐	☐	☐	☐	☐
OUTSIDE	☐	☐	☐	☐	☐
CTRL A/C	☐	■	■	☐	☐

PLUMBING			BASE ■		
X FULL BATH		1	1		
X HALF BATH					
X FIXTURES					

FLOOR	AREA	CONST	VALUE
1	1433	FR	197,940
2ND	820	FR	54,370
BSMT	277		3,960
SUBTOTAL			256,270
MULTI-FAMILY #		2	5,000
BUILDING TYPE		100%	0
BSMT FINISH		0 S.F.	0
FIREPLACE #		0	0
HEATING		0 S.F.	0
AIR COND		2,253 S.F.	3,710
PLUMBING #		6	7,260
GARAGES & CARPORTS			0
EXTRA FEATURES			10,700
SUBTOTAL			282,940
GRADE FACTOR			95 %
UNADJUSTED VALUE			201,590
FACTOR			100 %

SKETCH

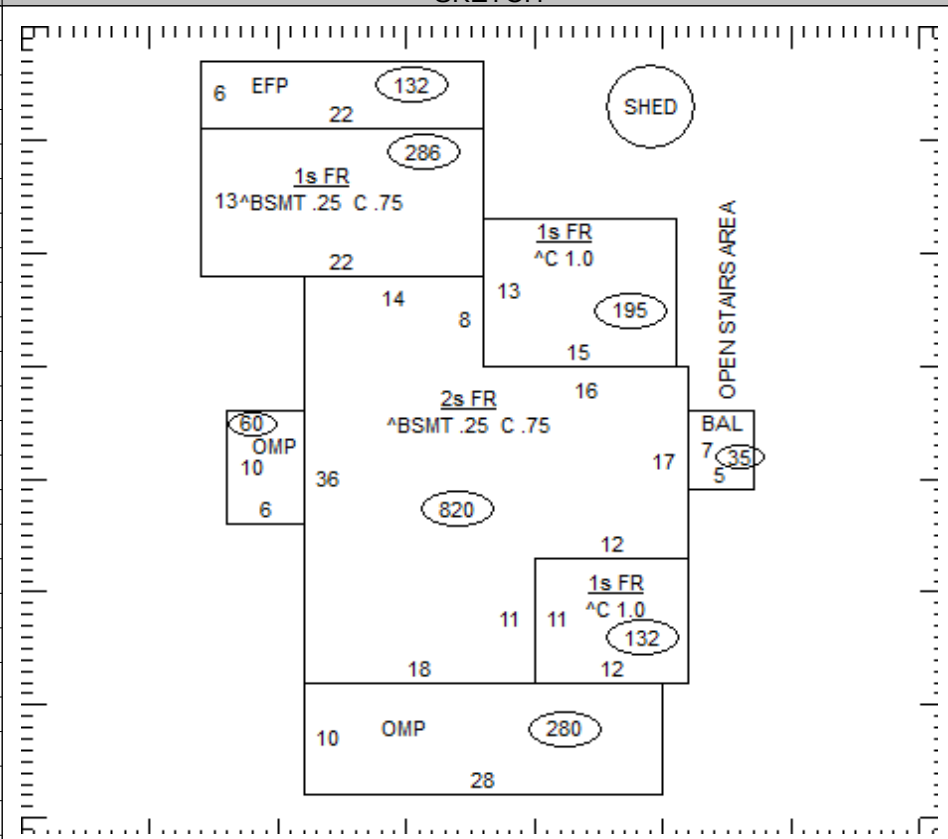

OCCUPANCY	ST.HT	SIZE	AREA	GRADE	PRICE	AGE	REMD	CND	UNADJ VAL	PHYS	PHYS VAL	FUNC	TRUE VAL
DWELLING	2	SK	2,253	C-		1908	2008	A	201,590	26	149,180		134,300
1 Shed		10x12	120	C		1990		A		57			0
2													
3													
4													
5													
6													
7													
8													
9													
10													
11													
											TOTAL		134,300

27-118400.0000

COMMENTS

Dwelling has an Economic Factor of 90%

27-118400.0000

SIEFRING BRIAN & SANDRA
SIEFRING BRIAN & SANDRA
3400 SIEGRIST JUTTE RD
COLDWATER, OH 45828

JEFFERSON TWP-CELINA CORP / CELINA SD
08-01-276-006

LEGAL INFORMATION
OLD PLAT

LOT#: 403

Property Class: 530
Neighborhood
27502720-01 -
Map: 04
Block: 07
Card: 29
Bk: Pg:

	OWNERSHIP	ADDRESS	CITY	STATE	ZIP	DATE	AMOUNT	DEED:CONV#	JS	VALID
1	BRUNS DOUGLAS & CATHY	1122 CANTERBURY DR	CELINA	OH	45822	04/22/1986	44,000	: A : 0	☐	■
2							0	0	☐	☐
3							0	0	☐	☐

X: ☐ TTO LISTER: BTC DATE: 08/08/2011 TIME: 12:00:00 AM ☐ LETTER ☐ LETTER REC'D GIS CODE

STREET/ROAD	TOPOGRAPHY	PU-UTILITIES-PR	NEIGHBORHOOD	INFLUENCE FACTORS	
■ PAVED	■ LEVEL	☐ WATER ☐	☐ IMPROVING	☐ A. NO ROAD	☐ F. RESTRICT
☐ GRAVEL	☐ HIGH	☐ SEWER ☐	■ STATIC	☐ B. TOPGRHY	☐ G. WOOD LT
☐ DIRT	☐ LOW	☐ GAS ☐	☐ DECLINING	☐ C. Ex Front	☐ H. VACANCY
■ SIDEWALKS	☐ ROLLING	☐ ELECTRIC ☐	☐ OLD	☐ D. QUANTITY	☐ I. WATER FRONT
☐ CURBS	☐ STANDARD	■ STANDARD	☐ STANDARD	☐ E. SZ/SHAPE	☐ J. OTHER/CDU

PROPERTY LOCATION
321 W FAYETTE ST

COMMENT

LAND COMPUTATIONS

LAND TYPE	SIZE	M RATE C	INF	M VALUE C
			TOTAL	23,600 0

VALUATION SUMMARY

VALUE YEAR									
REASON FOR CHANGE									
APPRAISED VALUE	LAND								
	IMPR								
	TOTAL								
ASSESSED VALUE	LAND								
	IMPR								
	TOTAL								

OCCUPANCY	EXTERIOR
☐SF ☐DU ☐TR	☐ WOOD
☐CONVERSION	☐ STUCCO
BUILDING TYPE	☐ ALM/VYNL
☐ MOBILE HOME	☐ CONC BLK
☐ BI/TR LEVEL	☐ METAL
☐ MOD/MAN	☐ BRICK
☐ _____	☐ STONE

ROOFING	ROOF TYPE
☐ METAL	☐ GABLE
☐ SLT/TLE	☐ HIP
☐ SHINGLES	☐ GAMBREL
☐ SHAKES	☐ MANSARD
☐ COMPOSITE	☐ FLAT

FLOORS	B	1	2	3	U
CONCRETE	☐	☐	☐	☐	☐
WOOD	☐	☐	☐	☐	☐
TILE/COMPO	☐	☐	☐	☐	☐
CARPET	☐	☐	☐	☐	☐

INT. FINISH	B	1	2	3	U
PLASTER/DW	☐	☐	☐	☐	☐
PANELING	☐	☐	☐	☐	☐
UNFINISHED	☐	☐	☐	☐	☐

ACCOMMODATIONS					
# OF ROOMS					
BEDROOMS					
FIREPLACES					

HEAT & AC	B	1	2	3	U
NO HEAT	☐	☐	☐	☐	☐
CTRL HEAT	☐	☐	☐	☐	☐
HW/STEAM	☐	☐	☐	☐	☐
ELECTRIC	☐	☐	☐	☐	☐
HEAT PUMP	☐	☐	☐	☐	☐
FLR/WALL	☐	☐	☐	☐	☐
STVE/SPCE	☐	☐	☐	☐	☐
GEOTHERMAL	☐	☐	☐	☐	☐
OUTSIDE	☐	☐	☐	☐	☐
CTRL A/C	☐	☐	☐	☐	☐

PLUMBING	BASE ☐				
X FULL BATH					
X HALF BATH					
X FIXTURES					

FLOOR	AREA	CONST	VALUE

SUBTOTAL		0
MULTI-FAMILY #	0	0
BUILDING TYPE	000%	0
BSMT FINISH	0 S.F.	0
FIREPLACE #	0	0
HEATING	0 S.F.	0
AIR COND	0 S.F.	0
PLUMBING #	0	0
GARAGES & CARPORTS		0
EXTRA FEATURES		0
SUBTOTAL		0
GRADE FACTOR		%
UNADJUSTED VALUE		0
FACTOR		%

SKETCH

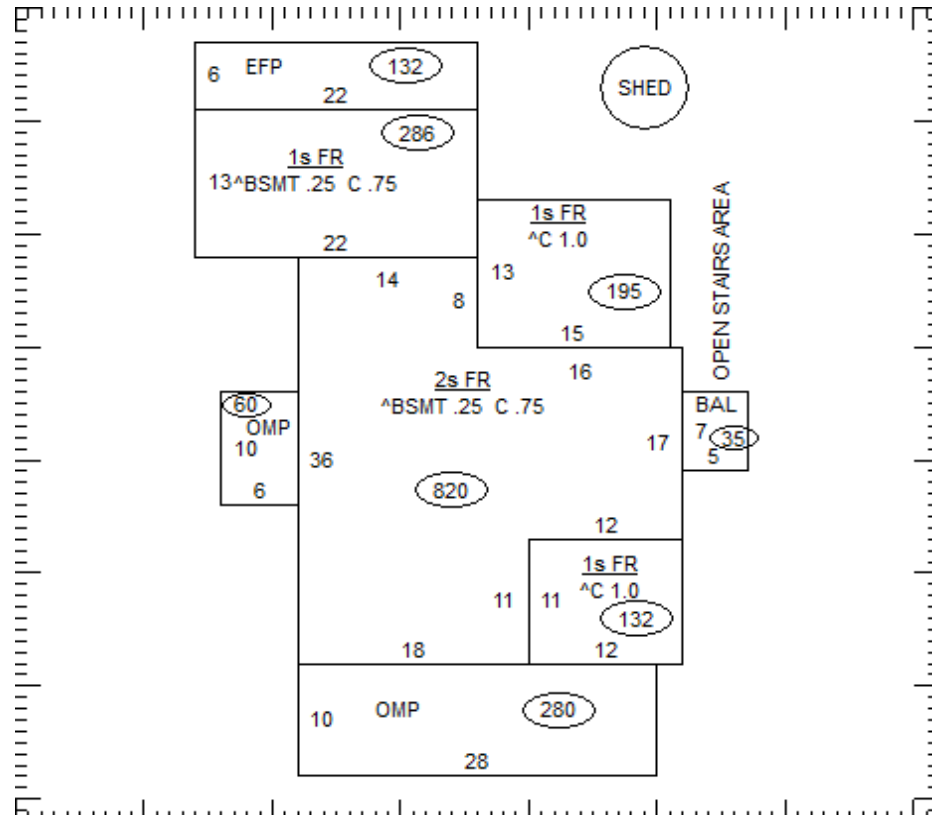

OCCUPANCY	ST.HT	SIZE	AREA	GRADE	PRICE	AGE	REMD	CND	UNADJ VAL	PHYS	PHYS VAL	FUNC	TRUE VAL
DWELLING		SK											
1													
2													
3													
4													
5													
6													
7													
8													
9													
10													
11													
												TOTAL	0

27-118400.0000

COMMENTS