27-088500.0000

VOND'S PROPERTIES LLC
VOND'S PROPERTIES LLC
1426 CANTERBURY DR
CELINA, OH 45822

JEFFERSON TWP-CELINA CORP / CELINA SD
09-06-102-012

LEGAL INFORMATION
OLD PLAT

LOT#: 205

Property Class: 530
Neighborhood
27502720-01 -
Map: 05
Block: 01
Card: 25
Bk: Pg:

	OWNERSHIP	ADDRESS	CITY	STATE	ZIP	DATE	AMOUNT	DEED:CONV#	JS	VALID
1	VOND'S PROPERTIES LLC	1426 CANTERBURY DR	CELINA	OH	45822	11/05/2020	225,000	WDC : 830	☐	■
2	SCHWARTZ & SHREVES SPEC	6789 HOWICK RD	CELINA	OH	45822	03/01/2006	35,000	WDC : A-M : 151	☐	☐
3	SCHMIDT JOYCE E FRIDAY	9526 RICE RD	CELINA	OH	45822	08/30/1995	0	: X : 0	☐	☐

X: ☐ TTO LISTER: DATE: 02/14/2011 TIME: 12:00:00 AM ☐ LETTER ☐ LETTER REC'D GIS CODE

STREET/ROAD	TOPOGRAPHY	PU-UTILITIES-PR	NEIGHBORHOOD	INFLUENCE FACTORS	
■ PAVED	■ LEVEL	☐ WATER ☐	☐ IMPROVING	☐ A. NO ROAD	☐ F. RESTRICT
☐ GRAVEL	☐ HIGH	☐ SEWER ☐	■ STATIC	☐ B. TOPGRHY	☐ G. WOOD LT
☐ DIRT	☐ LOW	☐ GAS ☐	☐ DECLINING	☐ C. Ex Front	☐ H. VACANCY
■ SIDEWALKS	☐ ROLLING	☐ ELECTRIC ☐	☐ OLD	☐ D. QUANTITY	☐ I. WATER FRONT
☐ CURBS	☐ STANDARD	■ STANDARD	☐ STANDARD	☐ E. SZ/SHAPE	☐ J. OTHER/CDU

PROPERTY LOCATION
411, 413 & 415 N CHERRY ST, CELINA

COMMENT
TY2022:Net Gen=$2,315.84, Other Assessment=$0.00
DE08 ADD TRIPLEX
DE11 ADD PAT
TriDwell=75

LAND COMPUTATIONS

LAND TYPE	SIZE	M RATE C	INF	M VALUE C
F:Front	F82 D132	ST380 DP94 ADJ357		29,300 0
			TOTAL	29,300 0

VALUATION SUMMARY

VALUE YEAR		2023	2020	2017					
REASON FOR CHANGE		RAPP	RAPP	RAPP					
APPRAISED VALUE	LAND	29,300	12,500	14,700					
	IMPR	185,200	130,800	126,400					
	TOTAL	214,500	143,300	141,100					
ASSESSED VALUE	LAND	10,260	4,380	5,150					
	IMPR	64,820	45,780	44,240					
	TOTAL	75,080	50,160	49,390					

OCCUPANCY	EXTERIOR
☐SF ☐DU ■TR	☐ WOOD
☐CONVERSION	☐ STUCCO
BUILDING TYPE	■ ALM/VYNL
☐ MOBILE HOME	☐ CONC BLK
☐ BI/TR LEVEL	☐ METAL
☐ MOD/MAN	☐ BRICK
☐ _____	☐ STONE

ROOFING	ROOF TYPE
☐ METAL	■ GABLE
☐ SLT/TLE	☐ HIP
■ SHINGLES	☐ GAMBREL
☐ SHAKES	☐ MANSARD
☐ COMPOSITE	☐ FLAT

FLOORS	B	1	2	3	U
CONCRETE	☐	☐	☐	☐	☐
WOOD	☐	☐	☐	☐	☐
TILE/COMPO	☐	■	☐	☐	☐
CARPET	☐	■	☐	☐	☐

INT. FINISH	B	1	2	3	U
PLASTER/DW	☐	■	☐	☐	☐
PANELING	☐	☐	☐	☐	☐
UNFINISHED	☐	☐	☐	☐	☐

ACCOMMODATIONS					
# OF ROOMS		12			
BEDROOMS		6			
FIREPLACES					

HEAT & AC	B	1	2	3	U
NO HEAT	☐	☐	☐	☐	☐
CTRL HEAT	☐	■	☐	☐	☐
HW/STEAM	☐	☐	☐	☐	☐
ELECTRIC	☐	☐	☐	☐	☐
HEAT PUMP	☐	☐	☐	☐	☐
FLR/WALL	☐	☐	☐	☐	☐
STVE/SPCE	☐	☐	☐	☐	☐
GEOTHERMAL	☐	☐	☐	☐	☐
OUTSIDE	☐	☐	☐	☐	☐
CTRL A/C	☐	■	☐	☐	☐

PLUMBING	BASE ■			
X FULL BATH		2		
X HALF BATH				
X FIXTURES				

FLOOR	AREA	CONST	VALUE
1	2616	FR	280,720

SUBTOTAL		280,720
MULTI-FAMILY #	2	5,000
BUILDING TYPE	100%	0
BSMT FINISH	0 S.F.	0
FIREPLACE #	0	0
HEATING	0 S.F.	0
AIR COND	2,616 S.F.	4,320
PLUMBING #	6	7,260
GARAGES & CARPORTS		21,300
EXTRA FEATURES		4,200
SUBTOTAL		322,800
GRADE FACTOR		100 %
UNADJUSTED VALUE		242,100
FACTOR		100 %

SKETCH

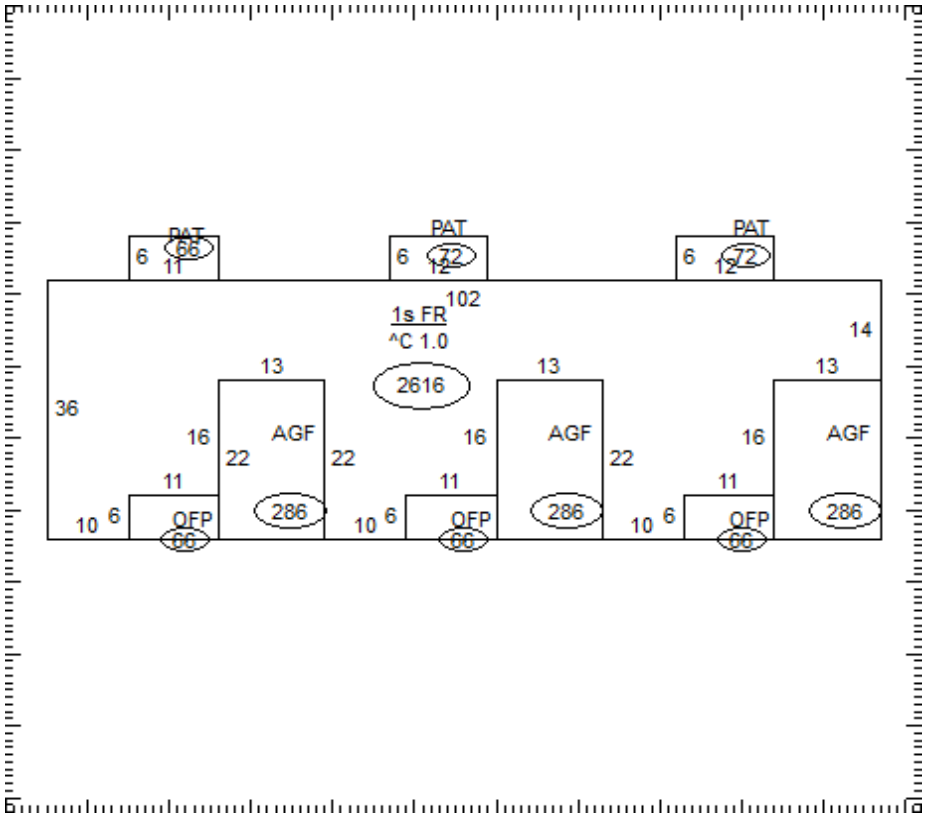

OCCUPANCY	ST.HT	SIZE	AREA	GRADE	PRICE	AGE	REMD	CND	UNADJ VAL	PHYS	PHYS VAL	FUNC	TRUE VAL
DWELLING	1	SK	2,616	C		2007		A	242,100	15	205,790		185,200
1													
2													
3													
4													
5													
6													
7													
8													
9													
10													
11													
											TOTAL		185,200

27-088500.0000

COMMENTS

Dwelling has an Economic Factor of 90%