27-087200.0000

POSITIVE REALTY COMPANY LLC
POSITIVE REALTY COMPANY LLC
PO BOX 92
MONTEZUMA, OH 45866

JEFFERSON TWP-CELINA CORP / CELINA SD
09-06-152-011

LEGAL INFORMATION
OLD PLAT
LOT NO 197 E 1/2
LOT#: 00197

Property Class: 530
Neighborhood
27502720-01 -
Map: 05
Block: 04
Card: 28
Bk: Pg:

	OWNERSHIP	ADDRESS	CITY	STATE	ZIP	DATE	AMOUNT	DEED:CONV#	JS	VALID
1	POSITIVE REALTY COMPANY	PO BOX 92	MONTEZUMA	OH	45866	12/03/2019	187,000	3:WDC : 832	☐	■
2	SCHWARTZ MYRON K &	6789 HOWICK RD	CELINA	OH	45822	02/06/1998	30,000	: A : 0	☐	■
3							0	0	☐	☐

X: ☐ TTO LISTER: DATE: 10/07/2011 TIME: 12:00:00 AM ☐ LETTER ☐ LETTER REC'D GIS CODE

STREET/ROAD	TOPOGRAPHY	PU-UTILITIES-PR	NEIGHBORHOOD	INFLUENCE FACTORS	
■ PAVED	■ LEVEL	☐ WATER ☐	☐ IMPROVING	☐ A. NO ROAD	☐ F. RESTRICT
☐ GRAVEL	☐ HIGH	☐ SEWER ☐	■ STATIC	☐ B. TOPGRHY	☐ G. WOOD LT
☐ DIRT	☐ LOW	☐ GAS ☐	☐ DECLINING	☐ C. Ex Front	☐ H. VACANCY
■ SIDEWALKS	☐ ROLLING	☐ ELECTRIC ☐	☐ OLD	☐ D. QUANTITY	☐ I. WATER FRONT
☐ CURBS	☐ STANDARD	■ STANDARD	☐ STANDARD	☐ E. SZ/SHAPE	☐ J. OTHER/CDU

PROPERTY LOCATION
227 E FAYETTE ST, CELINA

COMMENT
Tax Incentive Exempt Parcel: 27-087200.000K
(TY2022 L=0; B=25,160; T=25,160)
TY2022:Net Gen=$1,017.10, Other Assessment=$406.76
2004 BASE VALUES:L:$6970 B:$55970 T:$62940
2020 DUPL VALUES:L:$6200 B:$81,900 T:$88,100
2023 DUPL VALUES: L:$14,600 B:$121,500 T:$136,100
DE15 PER DATA MAILER CORR PLMB//RMV CANP
TAX INCENTIVE: TF505
TriDwell=75

LAND COMPUTATIONS

LAND TYPE	SIZE	M RATE C	INF	M VALUE C
F:Front	F41 D132	ST380 DP94 ADJ357		14,600 0
			TOTAL	6,970 0

VALUATION SUMMARY * Value Override Item

VALUE YEAR		* 2023	* 2020	* 2017					
REASON FOR CHANGE		RAPP	RAPP	RAPP					
APPRAISED VALUE	LAND	6,970	6,970	6,970					
	IMPR	55,970	55,970	55,970					
	TOTAL	62,940	62,940	62,940					
ASSESSED VALUE	LAND	2,440	2,440	2,440					
	IMPR	19,590	19,590	19,590					
	TOTAL	22,030	22,030	22,030					

OCCUPANCY	EXTERIOR
☐SF ☐DU ■TR	☐ WOOD
☐CONVERSION	☐ STUCCO
BUILDING TYPE	■ ALM/VYNL
☐ MOBILE HOME	☐ CONC BLK
☐ BI/TR LEVEL	☐ METAL
☐ MOD/MAN	☐ BRICK
☐ _____	☐ STONE

ROOFING	ROOF TYPE
☐ METAL	■ GABLE
☐ SLT/TLE	☐ HIP
■ SHINGLES	☐ GAMBREL
☐ SHAKES	☐ MANSARD
☐ COMPOSITE	☐ FLAT

FLOORS	B	1	2	3	U
CONCRETE	■	☐	☐	☐	☐
WOOD	☐	☐	☐	☐	☐
TILE/COMPO	☐	■	■	☐	☐
CARPET	☐	■	■	☐	☐

INT. FINISH	B	1	2	3	U
PLASTER/DW	☐	■	■	☐	☐
PANELING	☐	☐	☐	☐	☐
UNFINISHED	■	☐	☐	☐	☐

ACCOMMODATIONS					
# OF ROOMS		6	4		
BEDROOMS		1	4		
FIREPLACES					

HEAT & AC	B	1	2	3	U
NO HEAT	☐	☐	☐	☐	☐
CTRL HEAT	■	■	■	☐	☐
HW/STEAM	☐	☐	☐	☐	☐
ELECTRIC	☐	☐	☐	☐	☐
HEAT PUMP	☐	☐	☐	☐	☐
FLR/WALL	☐	☐	☐	☐	☐
STVE/SPCE	☐	☐	☐	☐	☐
GEOTHERMAL	☐	☐	☐	☐	☐
OUTSIDE	☐	☐	☐	☐	☐
CTRL A/C	☐	☐	☐	☐	☐

PLUMBING					BASE ■
X FULL BATH		2			
X HALF BATH					
X FIXTURES					

FLOOR	AREA	CONST	VALUE
1	1558	FR	204,890
2ND	1350	FR	85,230
BSMT	1350		19,310

SUBTOTAL		309,430
MULTI-FAMILY #	2	5,000
BUILDING TYPE	100%	0
BSMT FINISH	0 S.F.	0
FIREPLACE #	0	0
HEATING	0 S.F.	0
AIR COND	0 S.F.	0
PLUMBING #	6	7,260
GARAGES & CARPORTS		0
EXTRA FEATURES		3,600
SUBTOTAL		325,290
GRADE FACTOR		100 %
UNADJUSTED VALUE		243,970
FACTOR		100 %

SKETCH

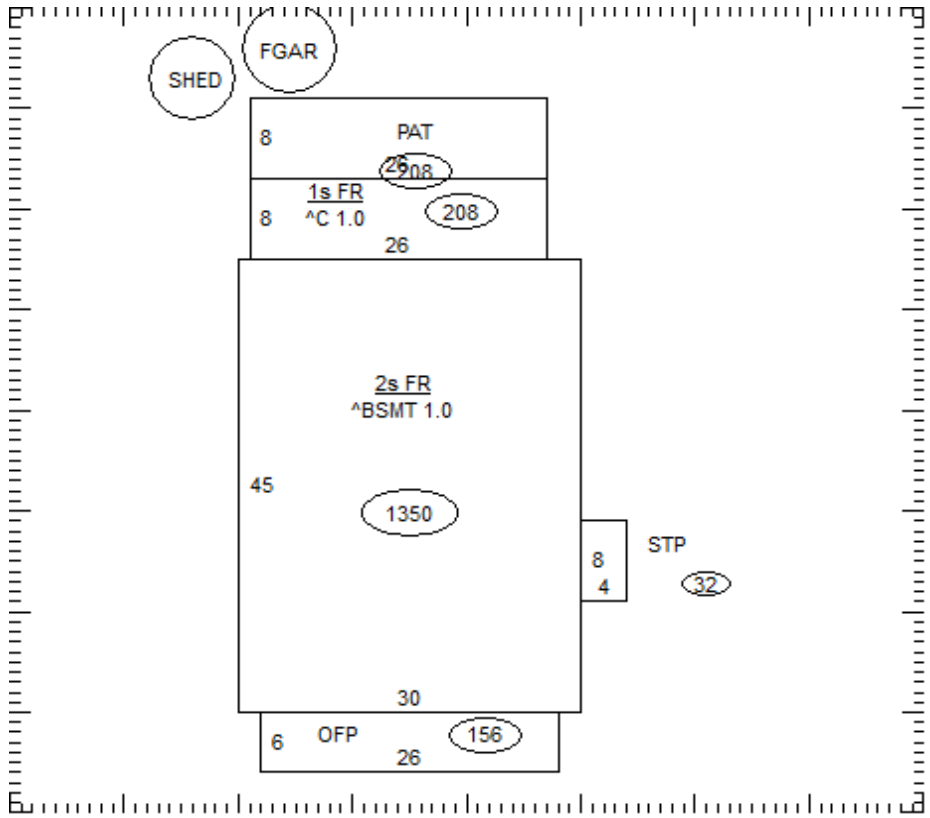

OCCUPANCY	ST.HT	SIZE	AREA	GRADE	PRICE	AGE	REMD	CND	UNADJ VAL	PHYS	PHYS VAL	FUNC	TRUE VAL
DWELLING	2	SK	2,908	C		1932		A	243,970	45	134,180		120,800
1 Gar - Frame		18x34	612	C	23.70	1932		A	14,500	95	730		700
2 Shed		8x10	80	C		1980		A		77			0
3													
4													
5													
6													
7													
8													
9													
10													
11													
											TOTAL		*55,970

27-087200.0000

COMMENTS

Dwelling has an Economic Factor of 90%