27-020370.0145

WILL JODI L & BOOS GABRIEL L
WILL JODI L & BOOS GABRIEL L
1807 MEADOWVIEW DR
CELINA, OH 45822

JEFFERSON TWP-CELINA CORP / CELINA SD
06-31-228-012

LEGAL INFORMATION
THE MEADOWS PHASE II

LOT#: 45

Property Class: 510
Neighborhood 27502705
Map: 02
Block: 04
Card: 78
Bk: Pg:

	OWNERSHIP	ADDRESS	CITY	STATE	ZIP	DATE	AMOUNT	DEED:CONV#	JS	VALID
1	WILL JODI L & BOOS GABRIEL	1807 MEADOWVIEW DR	CELINA	OH	45822	01/15/2019	320,000	WDC : 21	☐	■
2	MORGAN STEPHEN J &	1807 MEADOWVIEW DR	CELINA	OH	45822	04/08/2013	275,000	WDC : 193	☐	■
3	HUFFMAN SHIRLEY A	1807 MEADOWVIEW DR	CELINA	OH	45822	08/05/1992	27,900	: A : 0	☐	■

X: ☐ TTO LISTER: LG DATE: 07/20/2005 TIME: 12:00:00 AM ☐ LETTER ■ LETTER REC'D GIS CODE

STREET/ROAD	TOPOGRAPHY	PU-UTILITIES-PR	NEIGHBORHOOD	INFLUENCE FACTORS	
■ PAVED	■ LEVEL	☐ WATER ☐	☐ IMPROVING	☐ A. NO ROAD	☐ F. RESTRICT
☐ GRAVEL	☐ HIGH	☐ SEWER ☐	☐ STATIC	☐ B. TOPGRHY	☐ G. WOOD LT
☐ DIRT	☐ LOW	☐ GAS ☐	☐ DECLINING	☐ C. Ex Front	☐ H. VACANCY
☐ SIDEWALKS	☐ ROLLING	■ ELECTRIC ☐	☐ OLD	☐ D. QUANTITY	☐ I. WATER FRONT
☐ CURBS	☐ STANDARD	☐ STANDARD	☐ STANDARD	☐ E. SZ/SHAPE	☐ J. OTHER/CDU

PROPERTY LOCATION
1807 MEADOWVIEW DR, CELINA

COMMENT
TY2022:Net Gen=$4,709.00, Other Assessment=$0.00
DE16 COR SKETCH, ADD PATIO AND ROOF SHELTER PER REVAL DESKTOP REVIEW
DE18 CORR PLUMB PER SOCIAL MEDIA

LAND COMPUTATIONS

LAND TYPE	SIZE	M RATE C	INF	M VALUE C
F:Front	F100 D150	ST390 DP100 ADJ390		39,000 0
			TOTAL	39,000 0

VALUATION SUMMARY

VALUE YEAR		2023	2020	2019	2018	2018	2017		
REASON FOR CHANGE		RAPP	RAPP	MISC	MISC	MISC	RAPP		
APPRAISED VALUE	LAND	39,000	31,200	26,000	26,000	26,000	26,000		
	IMPR	344,900	266,700	230,700	230,700	230,700	227,700		
	TOTAL	383,900	297,900	256,700	256,700	256,700	253,700		
ASSESSED VALUE	LAND	13,650	10,920	9,100	9,100	9,100	9,100		
	IMPR	120,720	93,350	80,750	80,750	80,750	79,700		
	TOTAL	134,370	104,270	89,850	89,850	89,850	88,800		

OCCUPANCY	EXTERIOR
■ SF ☐ DU ☐ TR	☐ WOOD
☐ CONVERSION	☐ STUCCO
BUILDING TYPE	☐ ALM/VYNL
☐ MOBILE HOME	☐ CONC BLK
☐ BI/TR LEVEL	☐ METAL
☐ MOD/MAN	■ BRICK
☐ _____	☐ STONE
ROOFING	**ROOF TYPE**
☐ METAL	☐ GABLE
☐ SLT/TLE	■ HIP
■ SHINGLES	☐ GAMBREL
☐ SHAKES	☐ MANSARD
☐ COMPOSITE	☐ FLAT

FLOORS	B	1	2	3	U
CONCRETE	■	☐	☐	☐	☐
WOOD	☐	☐	☐	☐	☐
TILE/COMPO	☐	■	☐	☐	☐
CARPET	☐	■	☐	☐	☐

INT. FINISH	B	1	2	3	U
PLASTER/DW	☐	■	☐	☐	☐
PANELING	☐	☐	☐	☐	☐
UNFINISHED	☐	☐	☐	☐	☐

ACCOMMODATIONS					
# OF ROOMS	2	6			
BEDROOMS		3			
FIREPLACES					

HEAT & AC	B	1	2	3	U
NO HEAT	☐	☐	☐	☐	☐
CTRL HEAT	■	■	☐	☐	☐
HW/STEAM	☐	☐	☐	☐	☐
ELECTRIC	☐	☐	☐	☐	☐
HEAT PUMP	☐	☐	☐	☐	☐
FLR/WALL	☐	☐	☐	☐	☐
STVE/SPCE	☐	☐	☐	☐	☐
GEOTHERMAL	☐	☐	☐	☐	☐
OUTSIDE	☐	☐	☐	☐	☐
CTRL A/C	■	■	☐	☐	☐

PLUMBING					BASE ■
X FULL BATH		2			
X HALF BATH		1			
X FIXTURES					

FLOOR	AREA	CONST	VALUE
1	2612	BRK	299,910
BSMT	2402		34,350
SUBTOTAL			334,260
MULTI-FAMILY #	0		0
BUILDING TYPE	100%		0
BSMT FINISH	400 S.F.		5,720
FIREPLACE #	0		0
HEATING	0 S.F.		0
AIR COND	2,802 S.F.		4,620
PLUMBING #	8		9,680
GARAGES & CARPORTS			28,300
EXTRA FEATURES			4,900
SUBTOTAL			387,480
GRADE FACTOR			120 %
UNADJUSTED VALUE			464,980
FACTOR			100 %

SKETCH

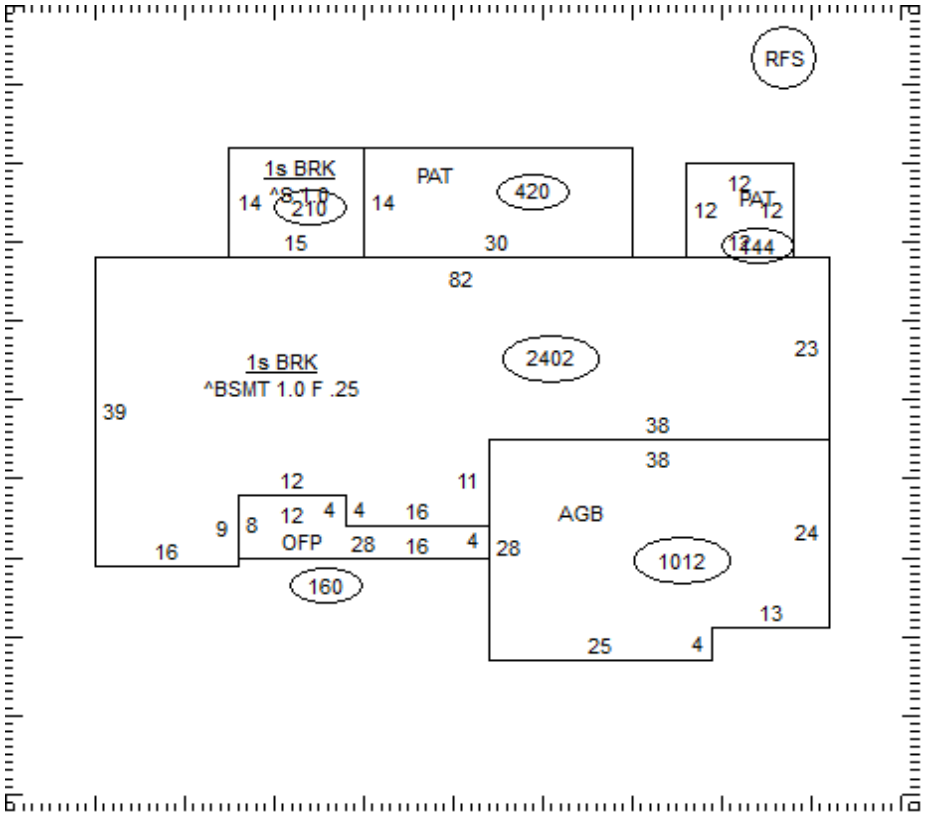

OCCUPANCY	ST.HT	SIZE	AREA	GRADE	PRICE	AGE	REMD	CND	UNADJ VAL	PHYS	PHYS VAL	FUNC	TRUE VAL
DWELLING	1	SK	2,612	B		1993		A	464,980	22	362,680		344,500
1 Roof Shelter		9x12	108	C	7.38	1993		A	800	47	420		400
2													
3													
4													
5													
6													
7													
8													
9													
10													
11													
											TOTAL		344,900

27-020370.0145

COMMENTS

Dwelling has an Economic Factor of 95% (Rollback Basis=$383,500)