27-020300.1600

BAYES CHRISTOPHER E & DESTINY J
BAYES CHRISTOPHER E & DESTINY J
901 IVY LN
CELINA, OH 45822

JEFFERSON TWP-CELINA CORP / CELINA SD
06-31-204-045

LEGAL INFORMATION
YORKSHIRE 4TH ADD

LOT#: 136

Property Class: 510
Neighborhood
27502708-03 -
Map: 02
Block: 03
Card: 62
Bk: Pg:

	OWNERSHIP	ADDRESS	CITY	STATE	ZIP	DATE	AMOUNT	DEED:CONV#	JS	VALID
1	BAYES CHRISTOPHER E &	901 IVY LN	CELINA	OH	45822	02/03/2021	183,000	WDC : 99	☐	■
2	DOWNEY MICHAEL L & KAREN	901 IVY LN	CELINA	OH	45822	05/29/2012	137,000	WDC : A : 272	☐	■
3	SWANEY ROBERT & PEGGY	901 IVY LN	CELINA	OH	45822		0	: 0	☐	☐

X: ☐ TTO LISTER: DF DATE: 07/19/2005 TIME: 12:00:00 AM ☐ LETTER ■ LETTER REC'D GIS CODE

STREET/ROAD	TOPOGRAPHY	PU-UTILITIES-PR	NEIGHBORHOOD	INFLUENCE FACTORS	
■ PAVED	■ LEVEL	☐ WATER ☐	☐ IMPROVING	☐ A. NO ROAD	☐ F. RESTRICT
☐ GRAVEL	☐ HIGH	☐ SEWER ☐	■ STATIC	☐ B. TOPGRHY	☐ G. WOOD LT
☐ DIRT	☐ LOW	☐ GAS ☐	☐ DECLINING	☐ C. Ex Front	☐ H. VACANCY
■ SIDEWALKS	☐ ROLLING	☐ ELECTRIC ☐	☐ OLD	☐ D. QUANTITY	☐ I. WATER FRONT
☐ CURBS	☐ STANDARD	■ STANDARD	☐ STANDARD	☐ E. SZ/SHAPE	☐ J. OTHER/CDU

PROPERTY LOCATION
901 IVY LN, CELINA

COMMENT
TY2022:Net Gen=$2,504.66, Other Assessment=$0.00
DE20 COR BATHRMS PER LISTER SHEET
DE22 RMV OWN OCC - DID NOT RETURN APP

LAND COMPUTATIONS

LAND TYPE	SIZE	M RATE C	INF	M VALUE C
F:Front	F76 D110	ST425 DP85 ADJ361		27,400 0
			TOTAL	27,400 0

VALUATION SUMMARY

VALUE YEAR		2023	2021	2020	2017				
REASON FOR CHANGE		RAPP	MISC	RAPP	RAPP				
APPRAISED VALUE	LAND	27,400	20,200	20,200	16,800				
	IMPR	153,300	134,800	131,800	104,900				
	TOTAL	180,700	155,000	152,000	121,700				
ASSESSED VALUE	LAND	9,590	7,070	7,070	5,880				
	IMPR	53,660	47,180	46,130	36,720				
	TOTAL	63,250	54,250	53,200	42,600				

OCCUPANCY	EXTERIOR
■ SF ☐ DU ☐ TR	■ WOOD
☐ CONVERSION	☐ STUCCO
BUILDING TYPE	☐ ALM/VYNL
☐ MOBILE HOME	☐ CONC BLK
☐ BI/TR LEVEL	☐ METAL
☐ MOD/MAN	☐ BRICK
☐ _____	☐ STONE

ROOFING	ROOF TYPE
☐ METAL	■ GABLE
☐ SLT/TLE	☐ HIP
■ SHINGLES	☐ GAMBREL
☐ SHAKES	☐ MANSARD
☐ COMPOSITE	☐ FLAT

FLOORS	B	1	2	3	U
CONCRETE	■	☐	☐	☐	☐
WOOD	☐	■	■	☐	☐
TILE/COMPO	☐	☐	☐	☐	☐
CARPET	☐	■	■	☐	☐

INT. FINISH	B	1	2	3	U
PLASTER/DW	☐	■	■	☐	☐
PANELING	☐	☐	☐	☐	☐
UNFINISHED	■	☐	☐	☐	☐

ACCOMMODATIONS					
# OF ROOMS	1	3	3		
BEDROOMS			3		
FIREPLACES		1			

HEAT & AC	B	1	2	3	U
NO HEAT	☐	☐	☐	☐	☐
CTRL HEAT	☐	■	■	☐	☐
HW/STEAM	☐	☐	☐	☐	☐
ELECTRIC	☐	☐	☐	☐	☐
HEAT PUMP	☐	☐	☐	☐	☐
FLR/WALL	☐	☐	☐	☐	☐
STVE/SPCE	☐	☐	☐	☐	☐
GEOTHERMAL	☐	☐	☐	☐	☐
OUTSIDE	☐	☐	☐	☐	☐
CTRL A/C	☐	■	■	☐	☐

PLUMBING			BASE ■		
X FULL BATH			1		
X HALF BATH		1			
X FIXTURES					

FLOOR	AREA	CONST	VALUE
1	864	FR	143,770
2ND	650	FR	51,920
BSMT	624		8,920

SUBTOTAL			204,610
MULTI-FAMILY #	0		0
BUILDING TYPE	100%		0
BSMT FINISH	0	S.F.	0
FIREPLACE #	1		4,400
HEATING	0	S.F.	0
AIR COND	1,514	S.F.	2,500
PLUMBING #	5		6,050
GARAGES & CARPORTS			9,900
EXTRA FEATURES			3,900
SUBTOTAL			231,360
GRADE FACTOR			105 %
UNADJUSTED VALUE			242,930
FACTOR			100 %

SKETCH

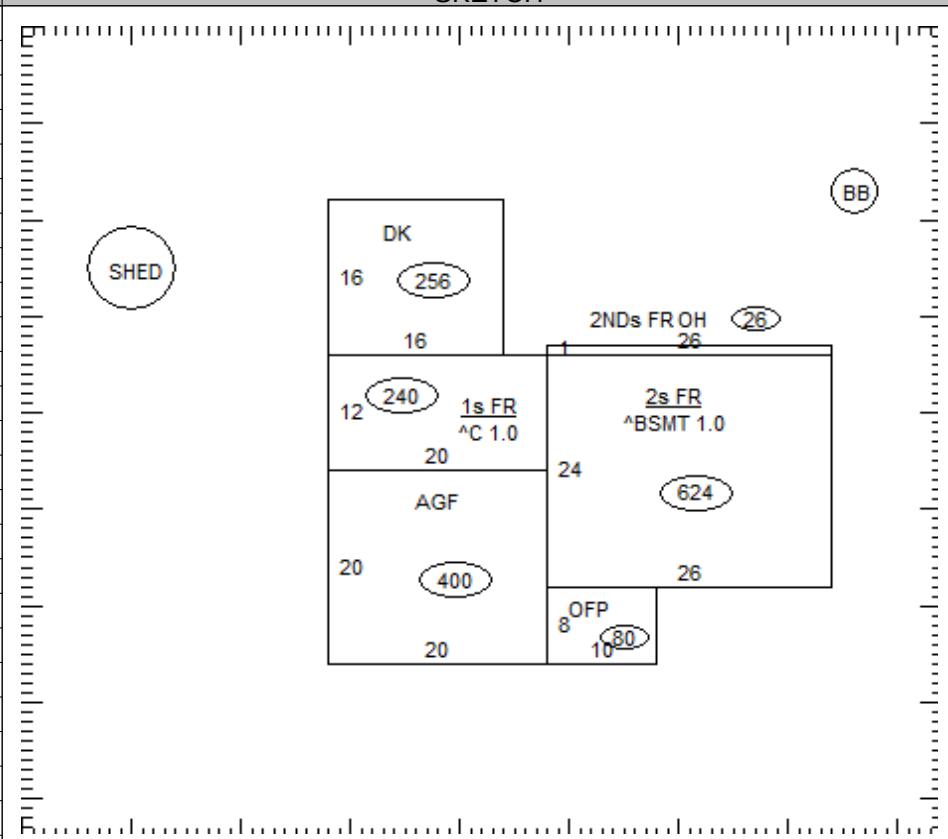

OCCUPANCY	ST.HT	SIZE	AREA	GRADE	PRICE	AGE	REMD	CND	UNADJ VAL	PHYS	PHYS VAL	FUNC	TRUE VAL
DWELLING	2	SK	1,514	C+		1980		A	242,930	30	170,050		153,000
1 BB Court		20x20	400	C	1.87	1989		A	750	57	320		300
2 Shed	PP	8x12	96	C		1989		A		57			0
3													
4													
5													
6													
7													
8													
9													
10													
11													
											TOTAL		153,300

27-020300.1600

COMMENTS

MASONRY TRIM
Dwelling has an Economic Factor of 90%