26-274300.0000

JEFFERSON TWP / CELINA SD

09-05-430-007

Property Class: 510

Neighborhood 265LA50-LA50

Map: 09
Block: 06
Card: 25

Bk: Pg:

KNUTZEN CORY E
KNUTZEN CORY E
128 HOME AVE
CELINA, OH 45822

LEGAL INFORMATION
HIGHLAND PARK
LOTS 237 & 238

	OWNERSHIP	ADDRESS	CITY	STATE	ZIP	DATE	AMOUNT	DEED:CONV#	JS	VALID
1	KNUTZEN CORY E	128 HOME AVE	CELINA	OH	45822	08/29/2023	0	QCE : X : 0	☐	☐
2	WUEBBENHORST CARLA L	305 GLYNWOOD AVE	WAPAKONETA	OH	45895	01/20/2022	220,000	WDC : 33	☐	■
3	ZIMMERLY JAKE & ERIN	128 HOME AVE	CELINA	OH	45822	05/17/2013	126,100	WDC : 307	☐	■

X: ☐ TTO LISTER: DF DATE: 06/16/2005 TIME: 12:00:00 AM ☐ LETTER ■ LETTER REC'D GIS CODE

STREET/ROAD	TOPOGRAPHY	PU-UTILITIES-PR	NEIGHBORHOOD	INFLUENCE FACTORS	
■ PAVED	■ LEVEL	☐ WATER ☐	☐ IMPROVING	☐ A. NO ROAD	☐ F. RESTRICT
☐ GRAVEL	☐ HIGH	☐ SEWER ☐	■ STATIC	☐ B. TOPGRHY	☐ G. WOOD LT
☐ DIRT	☐ LOW	☐ GAS ☐	☐ DECLINING	☐ C. Ex Front	☐ H. VACANCY
☐ SIDEWALKS	☐ ROLLING	☐ ELECTRIC ☐	☐ OLD	☐ D. QUANTITY	☐ I. WATER FRONT
☐ CURBS	☐ STANDARD	■ STANDARD	☐ STANDARD	☐ E. SZ/SHAPE	☐ J. OTHER/CDU

PROPERTY LOCATION
128 HOME AVE, CELINA

COMMENT
TY2022:Net Gen=$2,288.12, Other Assessment=$0.00
DE14 RMV 2.5%RB/ DIDN'T RET APP

LAND COMPUTATIONS

LAND TYPE	SIZE	M RATE C	INF	M VALUE C
F:Front	F44 D114	ST435 DP87 ADJ378		16,600 0
F:Front	F44 D113	ST435 DP86 ADJ374		16,500 0
			TOTAL	33,100 0

VALUATION SUMMARY

VALUE YEAR		2023	2020	2017					
REASON FOR CHANGE		RAPP	RAPP	RAPP					
APPRAISED VALUE	LAND	33,100	30,000	26,600					
	IMPR	160,900	110,100	98,600					
	TOTAL	194,000	140,100	125,200					
ASSESSED VALUE	LAND	11,590	10,500	9,310					
	IMPR	56,320	38,540	34,510					
	TOTAL	67,910	49,040	43,820					

OCCUPANCY	EXTERIOR
■SF ☐DU ☐TR	☐ WOOD
☐CONVERSION	☐ STUCCO
BUILDING TYPE	■ ALM/VYNL
☐ MOBILE HOME	☐ CONC BLK
☐ BI/TR LEVEL	☐ METAL
☐ MOD/MAN	■ BRICK
☐ _____	☐ STONE

ROOFING	ROOF TYPE
☐ METAL	■ GABLE
☐ SLT/TLE	☐ HIP
■ SHINGLES	☐ GAMBREL
☐ SHAKES	☐ MANSARD
☐ COMPOSITE	☐ FLAT

FLOORS	B	1	2	3	U
CONCRETE	■	☐	☐	☐	☐
WOOD	☐	☐	☐	☐	☐
TILE/COMPO	☐	■	☐	☐	☐
CARPET	☐	■	☐	☐	☐

INT. FINISH	B	1	2	3	U
PLASTER/DW	☐	■	☐	☐	☐
PANELING	■	☐	☐	☐	☐
UNFINISHED	☐	☐	☐	☐	☐

ACCOMMODATIONS					
# OF ROOMS	3	8			
BEDROOMS		3			
FIREPLACES		2			

HEAT & AC	B	1	2	3	U
NO HEAT	☐	☐	☐	☐	☐
CTRL HEAT	■	■	☐	☐	☐
HW/STEAM	☐	☐	☐	☐	☐
ELECTRIC	☐	☐	☐	☐	☐
HEAT PUMP	☐	☐	☐	☐	☐
FLR/WALL	☐	☐	☐	☐	☐
STVE/SPCE	☐	☐	☐	☐	☐
GEOTHERMAL	☐	☐	☐	☐	☐
OUTSIDE	☐	☐	☐	☐	☐
CTRL A/C	■	■	☐	☐	☐

PLUMBING					BASE ■
X FULL BATH		1			
X HALF BATH					
X FIXTURES					

FLOOR	AREA	CONST	VALUE
1	1636	FR	211,850
BSMT	1227		17,550
SUBTOTAL			229,400
MULTI-FAMILY #	0		0
BUILDING TYPE	100%		0
BSMT FINISH	694 S.F.		9,920
FIREPLACE #	2		8,800
HEATING	0 S.F.		0
AIR COND	2,330 S.F.		3,850
PLUMBING #	3		3,630
GARAGES & CARPORTS			10,800
EXTRA FEATURES			1,700
SUBTOTAL			268,100
GRADE FACTOR			100 %
UNADJUSTED VALUE			268,100
FACTOR			100 %

SKETCH

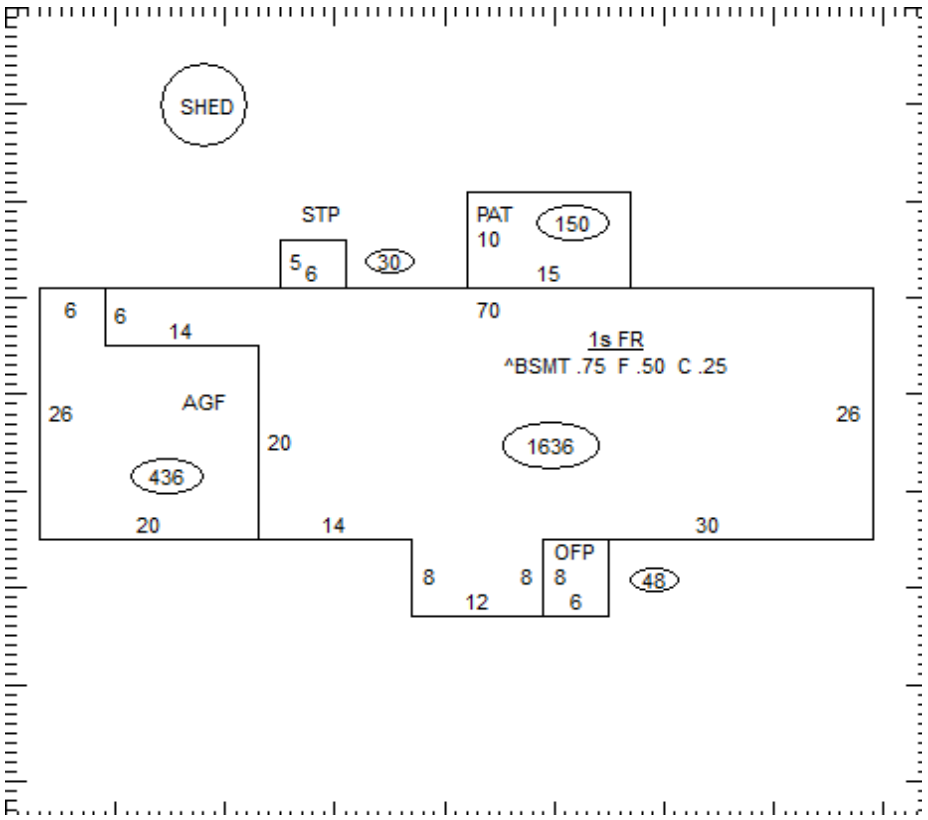

OCCUPANCY	ST.HT	SIZE	AREA	GRADE	PRICE	AGE	REMD	CND	UNADJ VAL	PHYS	PHYS VAL	FUNC	TRUE VAL
DWELLING	1	SK	1,636	C		1968		A	268,100	40	160,860		160,900
1 Shed		8x10	80	C		2000		A		37			0
2													
3													
4													
5													
6													
7													
8													
9													
10													
11													
											TOTAL		160,900

26-274300.0000

COMMENTS

42 LINEAL FEET BRICK TRIM 4FT HGIH 50 LINEAL FEET BRICK TRIM 8FT HIGH
Dwelling has an Economic Factor of 100%

26-274300.0000

JEFFERSON TWP / CELINA SD

09-05-430-007

Property Class: 510

Neighborhood 265LA50-LA50

Map: 09
Block: 06
Card: 25

Bk: Pg:

KNUTZEN CORY E
KNUTZEN CORY E
128 HOME AVE
CELINA, OH 45822

LEGAL INFORMATION
HIGHLAND PARK
LOTS 237 & 238

	OWNERSHIP	ADDRESS	CITY	STATE	ZIP	DATE	AMOUNT	DEED:CONV#	JS	VALID
1	SCHWIND R THOMS &	128 HOME AVE	CELINA	OH	45822	05/20/2008	137,000	WDC : A : 324	☐	■
2	DOVE CAROL	128 HOME AVE	CELINA	OH	45822	03/22/2004	137,000	WDC : A : 0	☐	■
3	MYERS JAMES W JR &	128 HOME AVE	CELINA	OH	45822		0	: 0	☐	☐

X: ☐ TTO LISTER: DF DATE: 06/16/2005 TIME: 12:00:00 AM ☐ LETTER ■ LETTER REC'D GIS CODE

STREET/ROAD	TOPOGRAPHY	PU-UTILITIES-PR	NEIGHBORHOOD	INFLUENCE FACTORS	
■ PAVED	■ LEVEL	☐ WATER ☐	☐ IMPROVING	☐ A. NO ROAD	☐ F. RESTRICT
☐ GRAVEL	☐ HIGH	☐ SEWER ☐	■ STATIC	☐ B. TOPGRHY	☐ G. WOOD LT
☐ DIRT	☐ LOW	☐ GAS ☐	☐ DECLINING	☐ C. Ex Front	☐ H. VACANCY
☐ SIDEWALKS	☐ ROLLING	☐ ELECTRIC ☐	☐ OLD	☐ D. QUANTITY	☐ I. WATER FRONT
☐ CURBS	☐ STANDARD	■ STANDARD	☐ STANDARD	☐ E. SZ/SHAPE	☐ J. OTHER/CDU

PROPERTY LOCATION
128 HOME AVE, CELINA

COMMENT

LAND COMPUTATIONS

LAND TYPE	SIZE	M	RATE	C	INF	M	VALUE	C
					TOTAL		33,100	0

VALUATION SUMMARY

VALUE YEAR									
REASON FOR CHANGE									
APPRAISED VALUE	LAND								
	IMPR								
	TOTAL								
ASSESSED VALUE	LAND								
	IMPR								
	TOTAL								

OCCUPANCY	EXTERIOR
☐SF ☐DU ☐TR	☐ WOOD
☐CONVERSION	☐ STUCCO
BUILDING TYPE	☐ ALM/VYNL
☐ MOBILE HOME	☐ CONC BLK
☐ BI/TR LEVEL	☐ METAL
☐ MOD/MAN	☐ BRICK
☐ _____	☐ STONE

ROOFING	ROOF TYPE
☐ METAL	☐ GABLE
☐ SLT/TLE	☐ HIP
☐ SHINGLES	☐ GAMBREL
☐ SHAKES	☐ MANSARD
☐ COMPOSITE	☐ FLAT

FLOORS	B	1	2	3	U
CONCRETE	☐	☐	☐	☐	☐
WOOD	☐	☐	☐	☐	☐
TILE/COMPO	☐	☐	☐	☐	☐
CARPET	☐	☐	☐	☐	☐

INT. FINISH	B	1	2	3	U
PLASTER/DW	☐	☐	☐	☐	☐
PANELING	☐	☐	☐	☐	☐
UNFINISHED	☐	☐	☐	☐	☐

ACCOMMODATIONS					
# OF ROOMS					
BEDROOMS					
FIREPLACES					

HEAT & AC	B	1	2	3	U
NO HEAT	☐	☐	☐	☐	☐
CTRL HEAT	☐	☐	☐	☐	☐
HW/STEAM	☐	☐	☐	☐	☐
ELECTRIC	☐	☐	☐	☐	☐
HEAT PUMP	☐	☐	☐	☐	☐
FLR/WALL	☐	☐	☐	☐	☐
STVE/SPCE	☐	☐	☐	☐	☐
GEOTHERMAL	☐	☐	☐	☐	☐
OUTSIDE	☐	☐	☐	☐	☐
CTRL A/C	☐	☐	☐	☐	☐

PLUMBING					BASE ☐
X FULL BATH					
X HALF BATH					
X FIXTURES					

FLOOR	AREA	CONST	VALUE

SUBTOTAL		0
MULTI-FAMILY #	0	0
BUILDING TYPE	000%	0
BSMT FINISH	0 S.F.	0
FIREPLACE #	0	0
HEATING	0 S.F.	0
AIR COND	0 S.F.	0
PLUMBING #	0	0
GARAGES & CARPORTS		0
EXTRA FEATURES		0
SUBTOTAL		0
GRADE FACTOR		%
UNADJUSTED VALUE		0
FACTOR		%

SKETCH

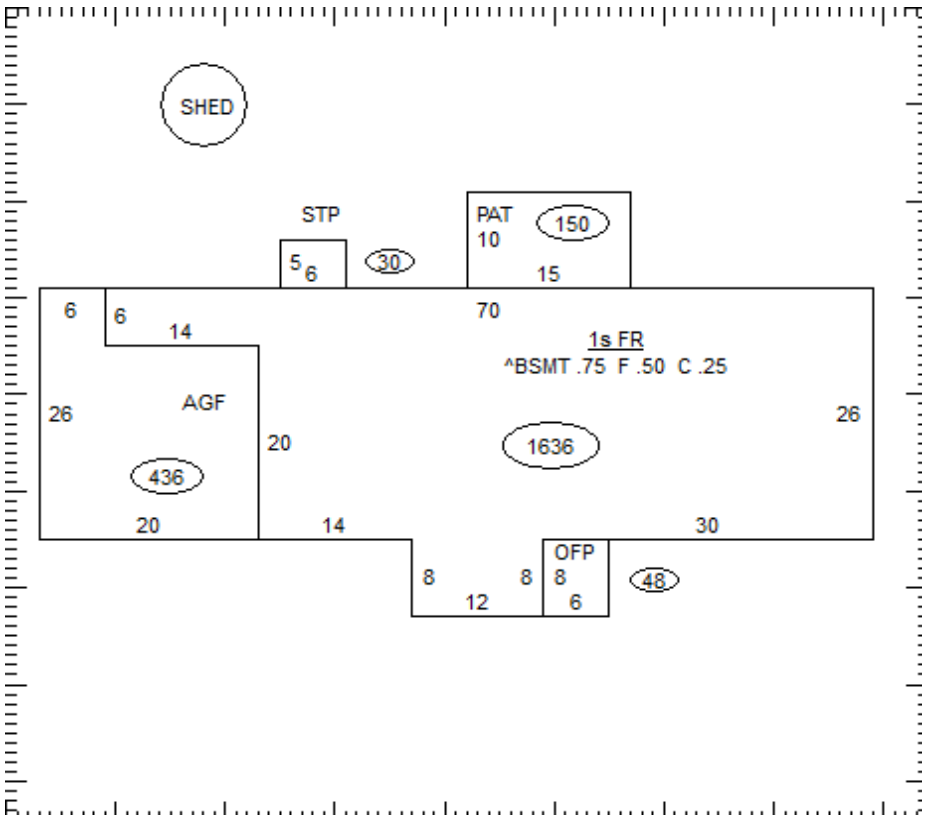

OCCUPANCY	ST.HT	SIZE	AREA	GRADE	PRICE	AGE	REMD	CND	UNADJ VAL	PHYS	PHYS VAL	FUNC	TRUE VAL
DWELLING		SK											
1													
2													
3													
4													
5													
6													
7													
8													
9													
10													
11													
												TOTAL	0

26-274300.0000

COMMENTS