26-240900.0213

JEFFERSON TWP / CELINA SD

09-05-326-004

Property Class: 510

Neighborhood 265LA80-LA80

Map: 09
Block: 05
Card: 29

Bk: Pg:

MCKIRNAN MICHAEL TOD & TIFFANY
MCKIRNAN MICHAEL TOD & TIFFANY
107 MARINERS POINT
CELINA, OH 45822

LEGAL INFORMATION
MARINERS POINT SUBD

RTS: 000-00-00 LOT#: 13

	OWNERSHIP	ADDRESS	CITY	STATE	ZIP	DATE	AMOUNT	DEED:CONV#	JS	VALID
1	MCKIRNAN MICHAEL TOD &	107 MARINERS POINT	CELINA	OH	45822	12/21/2020	290,000	SUC : 946	☐	■
2	WILLS KEVIN W & SUE A	107 MARINERS POINT DR	CELINA	OH	45822	11/07/1997	26,000	: A : 0	☐	■
3							0	0	☐	☐

X: ☐ TTO LISTER: DATE: 01/25/2011 TIME: 12:00:00 AM ☐ LETTER ☐ LETTER REC'D GIS CODE

STREET/ROAD	TOPOGRAPHY	PU-UTILITIES-PR	NEIGHBORHOOD	INFLUENCE FACTORS	
■ PAVED	■ LEVEL	☐ WATER ☐	☐ IMPROVING	☐ A. NO ROAD	☐ F. RESTRICT
☐ GRAVEL	☐ HIGH	☐ SEWER ☐	☐ STATIC	☐ B. TOPGRHY	☐ G. WOOD LT
☐ DIRT	☐ LOW	☐ GAS ☐	☐ DECLINING	■ C. Ex Front	☐ H. VACANCY
☐ SIDEWALKS	☐ ROLLING	☐ ELECTRIC ☐	☐ OLD	☐ D. QUANTITY	☐ I. WATER FRONT
☐ CURBS	☐ STANDARD	■ STANDARD	☐ STANDARD	☐ E. SZ/SHAPE	☐ J. OTHER/CDU

PROPERTY LOCATION
107 MARINERS POINT DR, CELINA

COMMENT
TY2022:Net Gen=$4,092.40, Other Assessment=$0.00
DE17 CORR PAT/DSKTP REV
DE11 CORR SK
DE21 RMV OWN OCC; DIDN'T RET APP

LAND COMPUTATIONS

LAND TYPE	SIZE	M RATE C	INF	M VALUE C
F:Front	F141 D144	ST500 DP98 ADJ490	C:0.07	64,300 0
			TOTAL	64,300 0

VALUATION SUMMARY

VALUE YEAR		2023	2020	2017	2017				
REASON FOR CHANGE		RAPP	RAPP	RAPP	MISC				
APPRAISED VALUE	LAND	64,300	54,000	51,400	51,400				
	IMPR	272,300	196,600	187,900	155,100				
	TOTAL	336,600	250,600	239,300	206,500				
ASSESSED VALUE	LAND	22,510	18,900	17,990	17,990				
	IMPR	95,310	68,810	65,770	54,290				
	TOTAL	117,820	87,710	83,760	72,280				

OCCUPANCY	EXTERIOR
■ SF ☐ DU ☐ TR	■ WOOD
☐ CONVERSION	☐ STUCCO
BUILDING TYPE	☐ ALM/VYNL
☐ MOBILE HOME	☐ CONC BLK
☐ BI/TR LEVEL	☐ METAL
☐ MOD/MAN	☐ BRICK
☐ _____	☐ STONE

ROOFING	ROOF TYPE
☐ METAL	■ GABLE
☐ SLT/TLE	☐ HIP
■ SHINGLES	☐ GAMBREL
☐ SHAKES	☐ MANSARD
☐ COMPOSITE	☐ FLAT

FLOORS	B	1	2	3	U
CONCRETE	■	☐	☐	☐	☐
WOOD	☐	☐	☐	☐	☐
TILE/COMPO	☐	■	☐	■	☐
CARPET	■	■	☐	■	☐

INT. FINISH	B	1	2	3	U
PLASTER/DW	■	■	☐	■	☐
PANELING	☐	☐	☐	☐	☐
UNFINISHED	■	☐	■	☐	☐

ACCOMMODATIONS					
# OF ROOMS	1	4		4	
BEDROOMS				4	
FIREPLACES		1			

HEAT & AC	B	1	2	3	U
NO HEAT	☐	☐	■	☐	☐
CTRL HEAT	☐	■	☐	■	☐
HW/STEAM	☐	☐	☐	☐	☐
ELECTRIC	☐	☐	☐	☐	☐
HEAT PUMP	☐	☐	☐	☐	☐
FLR/WALL	☐	☐	☐	☐	☐
STVE/SPCE	☐	☐	☐	☐	☐
GEOTHERMAL	☐	☐	☐	☐	☐
OUTSIDE	☐	☐	☐	☐	☐
CTRL A/C	☐	■	☐	☐	☐

PLUMBING				BASE ■	
X FULL BATH				2	
X HALF BATH					
X FIXTURES					

FLOOR	AREA	CONST	VALUE
1	1264	FR	183,890
.25	126	FR	16,780
2ND	942	FR	65,780
BSMT	1242		17,760

SUBTOTAL		284,210
MULTI-FAMILY #	0	0
BUILDING TYPE	100%	0
BSMT FINISH	520 S.F.	7,440
FIREPLACE #	1	4,400
HEATING	506 S.F.	-1,920
AIR COND	1,264 S.F.	2,090
PLUMBING #	6	7,260
GARAGES & CARPORTS		12,500
EXTRA FEATURES		16,500
SUBTOTAL		332,480
GRADE FACTOR		105 %
UNADJUSTED VALUE		349,100
FACTOR		100 %

SKETCH

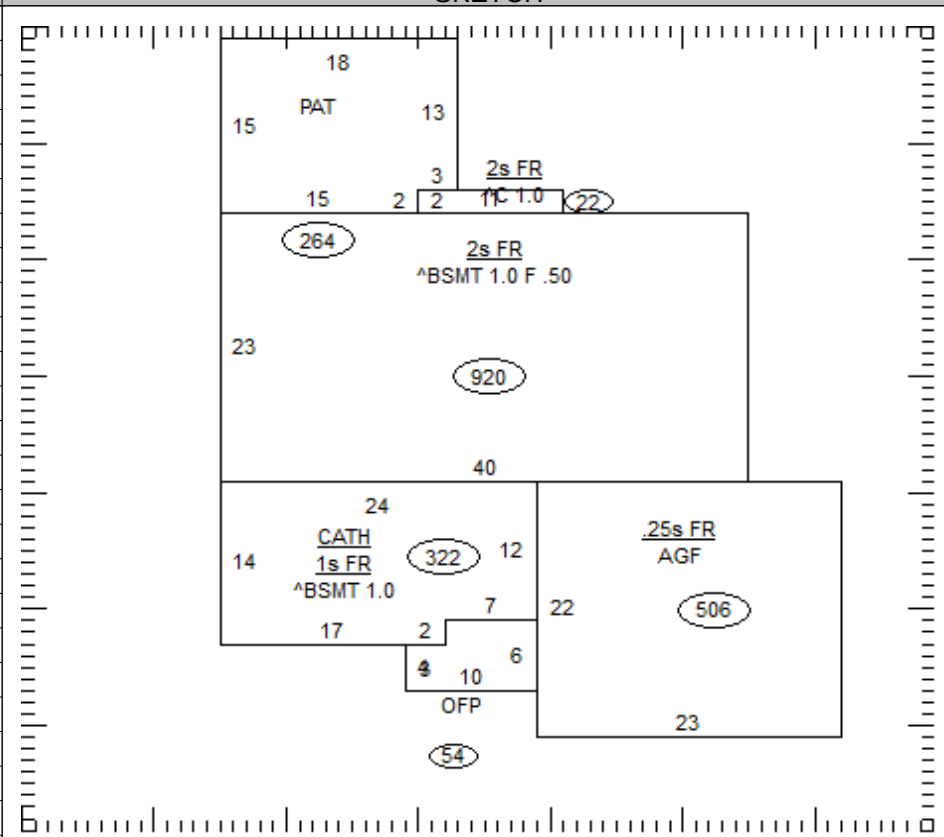

OCCUPANCY	ST.HT	SIZE	AREA	GRADE	PRICE	AGE	REMD	CND	UNADJ VAL	PHYS	PHYS VAL	FUNC	TRUE VAL
DWELLING	2	SK	2,332	C+		1998		A	349,100	22	272,300		272,300
1													
2													
3													
4													
5													
6													
7													
8													
9													
10													
11													
											TOTAL		272,300

26-240900.0213

COMMENTS

Dwelling has an Economic Factor of 100%