26-064200.0000

JEFFERSON TWP / CELINA SD

06-32-151-006

Property Class: 510

Neighborhood 26502656-01 -

Map: 05B
Block:
Card: 03
Bk: Pg:

DONOVAN RANDY E & DIANE T
DONOVAN RANDY E & DIANE T
1511 MYERS RD
CELINA, OH 45822

LEGAL INFORMATION
TULLIS SUBDIVISION
SW NW
RTS: 003-05-32 LOT#: 00001

	OWNERSHIP	ADDRESS	CITY	STATE	ZIP	DATE	AMOUNT	DEED:CONV#	JS	VALID
1	DONOVAN RANDY E & DIANE T	1511 MYERS RD	CELINA	OH	45822	09/24/2019	175,000	2:WDC : 640	☐	■
2	JOHNSMAN ADAM P & JULIE B	1511 MYERS RD	CELINA	OH	45822	07/12/2002	85,500	: A : 0	☐	■
3							0	0	☐	☐

X: ☐ TTO LISTER: EE DATE: 04/28/2005 TIME: 12:00:00 AM ☐ LETTER ■ LETTER REC'D GIS CODE

STREET/ROAD	TOPOGRAPHY	PU-UTILITIES-PR	NEIGHBORHOOD	INFLUENCE FACTORS	
☐ PAVED	☐ LEVEL	☐ WATER ☐	☐ IMPROVING	☐ A. NO ROAD	☐ F. RESTRICT
☐ GRAVEL	☐ HIGH	☐ SEWER ☐	☐ STATIC	☐ B. TOPGRHY	☐ G. WOOD LT
☐ DIRT	☐ LOW	☐ GAS ☐	☐ DECLINING	☐ C. Ex Front	☐ H. VACANCY
☐ SIDEWALKS	☐ ROLLING	☐ ELECTRIC ☐	☐ OLD	☐ D. QUANTITY	☐ I. WATER FRONT
☐ CURBS	☐ STANDARD	■ STANDARD	☐ STANDARD	☐ E. SZ/SHAPE	☐ J. OTHER/CDU

PROPERTY LOCATION
1511 MYERS RD, CELINA

COMMENT
TY2022:Net Gen=$1,719.42, Other Assessment=$2.00
DE15 RMV OLD AND ADD NEW PAT PER DATA MAILER
NC24 CHK FOR REAR DWLG ADDITION

LAND COMPUTATIONS

LAND TYPE	SIZE	M RATE C	INF	M VALUE C
F:Front	F79 D239	ST240 DP116 ADJ278		22,000 0
			TOTAL	22,000 0

VALUATION SUMMARY

VALUE YEAR		2023	2020	2017					
REASON FOR CHANGE		RAPP	RAPP	RAPP					
APPRAISED VALUE	LAND	22,000	18,300	17,400					
	IMPR	120,800	89,300	81,200					
	TOTAL	142,800	107,600	98,600					
ASSESSED VALUE	LAND	7,700	6,410	6,090					
	IMPR	42,280	31,260	28,420					
	TOTAL	49,980	37,670	34,510					

OCCUPANCY	EXTERIOR
■SF ☐DU ☐TR	☐ WOOD
☐CONVERSION	☐ STUCCO
BUILDING TYPE	■ ALM/VYNL
☐ MOBILE HOME	☐ CONC BLK
☐ BI/TR LEVEL	☐ METAL
☐ MOD/MAN	☐ BRICK
☐ _____	☐ STONE

ROOFING	ROOF TYPE
☐ METAL	☐ GABLE
☐ SLT/TLE	■ HIP
■ SHINGLES	☐ GAMBREL
☐ SHAKES	☐ MANSARD
☐ COMPOSITE	☐ FLAT

FLOORS	B	1	2	3	U
CONCRETE	■	☐	☐	☐	☐
WOOD	☐	■	☐	☐	☐
TILE/COMPO	☐	■	☐	☐	☐
CARPET	☐	■	☐	☐	☐

INT. FINISH	B	1	2	3	U
PLASTER/DW	☐	■	☐	☐	☐
PANELING	☐	☐	☐	☐	☐
UNFINISHED	■	☐	☐	☐	☐

ACCOMMODATIONS					
# OF ROOMS	3	6			
BEDROOMS		3			
FIREPLACES					

HEAT & AC	B	1	2	3	U
NO HEAT	☐	☐	☐	☐	☐
CTRL HEAT	☐	■	☐	☐	☐
HW/STEAM	☐	■	☐	☐	☐
ELECTRIC	☐	■	☐	☐	☐
HEAT PUMP	☐	☐	☐	☐	☐
FLR/WALL	☐	☐	☐	☐	☐
STVE/SPCE	☐	☐	☐	☐	☐
GEOTHERMAL	☐	☐	☐	☐	☐
OUTSIDE	☐	☐	☐	☐	☐
CTRL A/C	☐	■	☐	☐	☐

PLUMBING					BASE ■
X FULL BATH		1			
X HALF BATH					
X FIXTURES					

FLOOR	AREA	CONST	VALUE
1	1304	FR	186,420
BSMT	1024		14,640
SUBTOTAL			201,060
MULTI-FAMILY #	0		0
BUILDING TYPE	100%		0
BSMT FINISH	0 S.F.		0
FIREPLACE #	0		0
HEATING	0 S.F.		0
AIR COND	1,304 S.F.		2,150
PLUMBING #	3		3,630
GARAGES & CARPORTS			10,900
EXTRA FEATURES			2,600
SUBTOTAL			220,340
GRADE FACTOR			105 %
UNADJUSTED VALUE			231,360
FACTOR			100 %

SKETCH

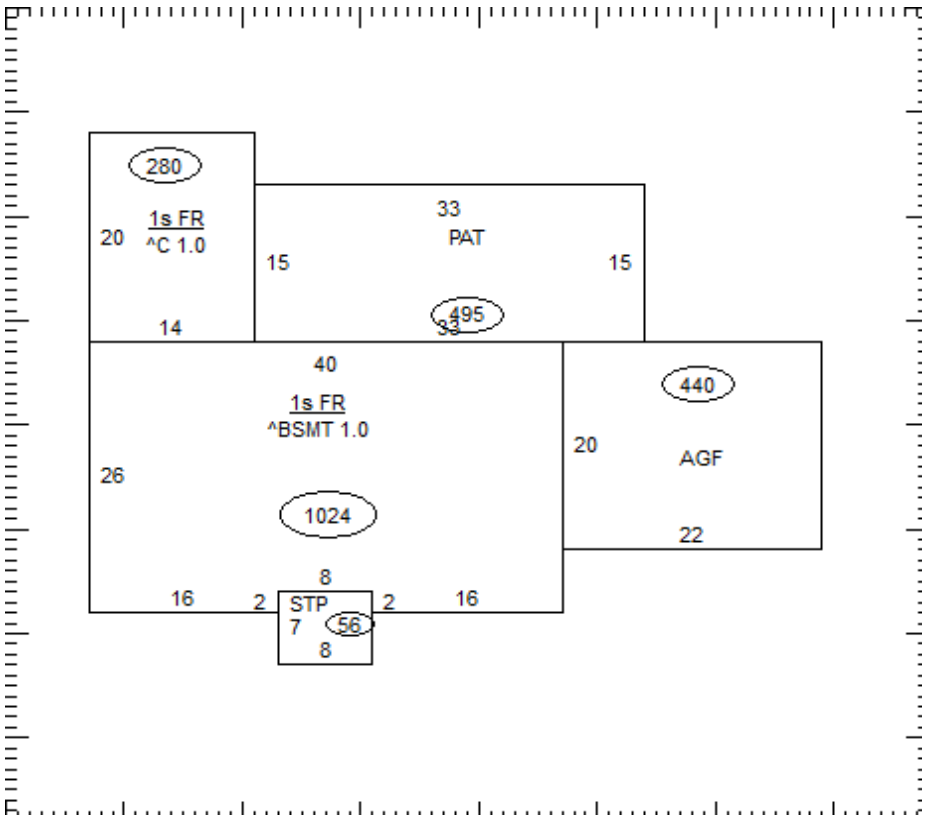

OCCUPANCY	ST.HT	SIZE	AREA	GRADE	PRICE	AGE	REMD	CND	UNADJ VAL	PHYS	PHYS VAL	FUNC	TRUE VAL
DWELLING	1	SK	1,304	C+		1954		A	231,360	42	134,190		120,800
1													
2													
3													
4													
5													
6													
7													
8													
9													
10													
11													
											TOTAL		120,800

26-064200.0000

COMMENTS

Dwelling has an Economic Factor of 90%