26-018100.0000

JEFFERSON TWP / CELINA SD

05-35-351-007

Property Class: 510

Neighborhood 009265-R150

Map: 02
Block:
Card: 31
Bk: Pg:

ROSENBECK CHRISTOPHER & TAYLOR
ROSENBECK CHRISTOPHER & TAYLOR
7074 FLEETFOOT RD
CELINA, OH 45822

LEGAL INFORMATION
HUMBERT SUBDIVISION
LOT 3 PT S SD &
PT LOT 2 N SD RTS: 002-05-35 LOT#: 3

	OWNERSHIP	ADDRESS	CITY	STATE	ZIP	DATE	AMOUNT	DEED:CONV#	JS	VALID
1	ROSENBECK CHRISTOPHER &	7074 FLEETFOOT RD	CELINA	OH	45822	06/07/2021	195,000	WDC : 447	☐	■
2	KOVACH MICHAEL P &	7074 FLEETFOOT RD	CELINA	OH	45822	08/19/2005	105,000	WDC : A : 0	☐	■
3	SITES TERESA A	7074 FLEETFOOT RD	CELINA	OH	45822	11/04/1997	89,000	: A : 0	☐	■

X: ☐ TTO LISTER: TS DATE: 12/30/2016 TIME: 12:00:00 AM ☐ LETTER ☐ LETTER REC'D GIS CODE

STREET/ROAD	TOPOGRAPHY	PU-UTILITIES-PR	NEIGHBORHOOD	INFLUENCE FACTORS	
■ PAVED	■ LEVEL	☐ WATER ■	☐ IMPROVING	☐ A. NO ROAD	☐ F. RESTRICT
☐ GRAVEL	☐ HIGH	☐ SEWER ■	■ STATIC	☐ B. TOPGRHY	☐ G. WOOD LT
☐ DIRT	☐ LOW	■ GAS ☐	☐ DECLINING	☐ C. Ex Front	☐ H. VACANCY
☐ SIDEWALKS	☐ ROLLING	■ ELECTRIC ☐	☐ OLD	☐ D. QUANTITY	☐ I. WATER FRONT
☐ CURBS	☐ STANDARD	☐ STANDARD	☐ STANDARD	☐ E. SZ/SHAPE	☐ J. OTHER/CDU

PROPERTY LOCATION
7074 FLEETFOOT RD, CELINA

COMMENT
TY2022:Net Gen=$2,451.44, Other Assessment=$2.00
DE17 FIELDCHK RVW CHGS: CORR WDDK MSMNTS
DE22 DESKTOP RVW; ADD PAT W/ CPY
DE22 RMV OWN OCC - DID NOT RETURN APP

LAND COMPUTATIONS

LAND TYPE	SIZE	M RATE C	INF	M VALUE C
HS:Home Site <1 @ 25440*0.87	AC:0.62	22130		22,100 0
Total Acres: .6200			TOTAL	22,100 0

VALUATION SUMMARY

VALUE YEAR		2023	2022	2020	2017	2017			
REASON FOR CHANGE		RAPP	NC	RAPP	RAPP	MISC			
APPRAISED VALUE	LAND	22,100	17,500	17,500	14,400	14,000			
	IMPR	185,300	132,600	130,800	103,100	82,300			
	TOTAL	207,400	150,100	148,300	117,500	96,300			
ASSESSED VALUE	LAND	7,740	6,130	6,130	5,040	4,900			
	IMPR	64,860	46,410	45,780	36,090	28,810			
	TOTAL	72,600	52,540	51,910	41,130	33,710			

OCCUPANCY	EXTERIOR
■ SF ☐ DU ☐ TR	☐ WOOD
☐ CONVERSION	☐ STUCCO
BUILDING TYPE	■ ALM/VYNL
☐ MOBILE HOME	☐ CONC BLK
☐ BI/TR LEVEL	☐ METAL
☐ MOD/MAN	☐ BRICK
☐ _____	☐ STONE
ROOFING	**ROOF TYPE**
☐ METAL	■ GABLE
☐ SLT/TLE	☐ HIP
■ SHINGLES	☐ GAMBREL
☐ SHAKES	☐ MANSARD
☐ COMPOSITE	☐ FLAT

FLOORS	B	1	2	3	U
CONCRETE	☐	☐	☐	☐	☐
WOOD	☐	☐	☐	☐	☐
TILE/COMPO	☐	■	☐	☐	☐
CARPET	☐	■	■	☐	☐

INT. FINISH	B	1	2	3	U
PLASTER/DW	☐	■	■	☐	☐
PANELING	☐	■	☐	☐	☐
UNFINISHED	☐	☐	☐	☐	☐

ACCOMMODATIONS					
# OF ROOMS		3	3		
BEDROOMS			3		
FIREPLACES					

HEAT & AC	B	1	2	3	U
NO HEAT	☐	☐	☐	☐	☐
CTRL HEAT	☐	■	■	☐	☐
HW/STEAM	☐	☐	☐	☐	☐
ELECTRIC	☐	■	■	☐	☐
HEAT PUMP	☐	■	■	☐	☐
FLR/WALL	☐	☐	☐	☐	☐
STVE/SPCE	☐	☐	☐	☐	☐
GEOTHERMAL	☐	☐	☐	☐	☐
OUTSIDE	☐	☐	☐	☐	☐
CTRL A/C	☐	■	■	☐	☐

PLUMBING					BASE ■
X FULL BATH					
X HALF BATH		1			
X FIXTURES					

FLOOR	AREA	CONST	VALUE
1	1023	FR	162,290
.5	512	FR	50,320

SUBTOTAL			212,610
MULTI-FAMILY #	0		0
BUILDING TYPE	100%		0
BSMT FINISH	0	S.F.	0
FIREPLACE #	0		0
HEATING	0	S.F.	0
AIR COND	1,535	S.F.	2,530
PLUMBING #	2		2,420
GARAGES & CARPORTS			12,000
EXTRA FEATURES			6,800
SUBTOTAL			236,360
GRADE FACTOR			100 %
UNADJUSTED VALUE			236,360
FACTOR			100 %

SKETCH

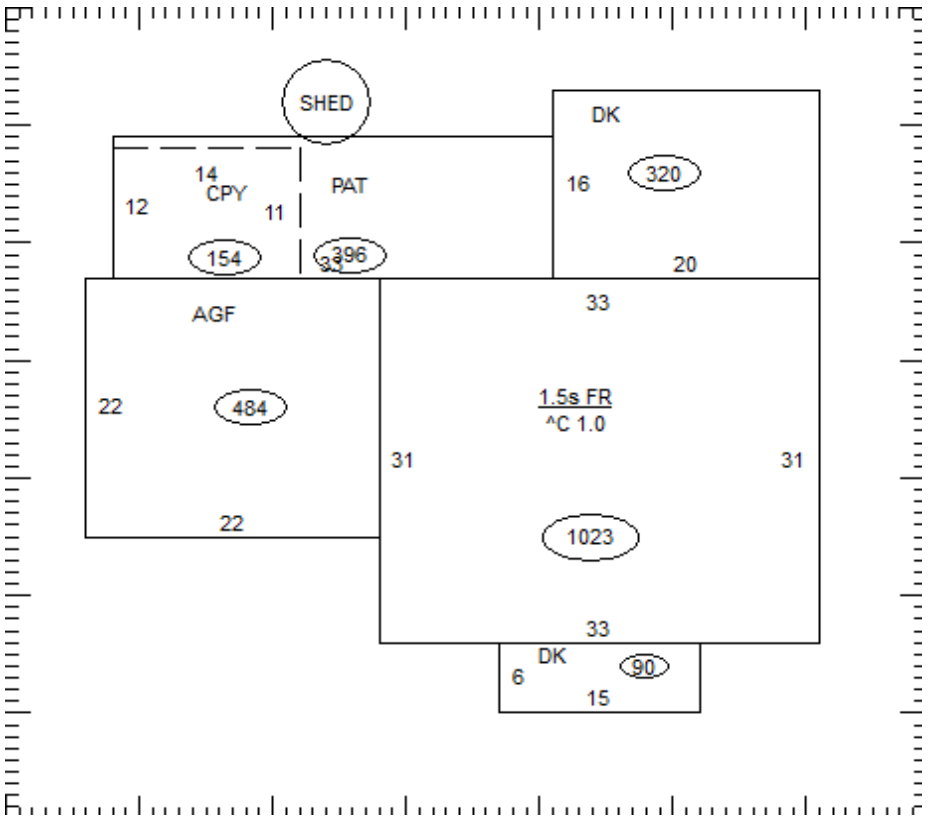

OCCUPANCY	ST.HT	SIZE	AREA	GRADE	PRICE	AGE	REMD	CND	UNADJ VAL	PHYS	PHYS VAL	FUNC	TRUE VAL
DWELLING	1.5	SK	1,535	C		1978		A	236,360	30	165,450		185,300
1 Shed	PP	8x16	128	C		2000		A		37			0
2													
3													
4													
5													
6													
7													
8													
9													
10													
11													
											TOTAL		185,300

26-018100.0000

COMMENTS

Dwelling has an Economic Factor of 112%