26-008400.0200

JEFFERSON TWP / CELINA SD

05-33-200-006

Property Class: 510

Neighborhood 009265-R150

Map:
Block:
Card:
Bk: Pg:

ADAMS COLIN E
ADAMS COLIN E
4429 FAIRGROUND RD
CELINA, OH 45822
Created in 2021 From 26-008400.0000 due to Split

LEGAL INFORMATION
PT SE NE

RTS: 002-05-33
Acres:2.1540

	OWNERSHIP	ADDRESS	CITY	STATE	ZIP	DATE	AMOUNT	DEED:CONV#	JS	VALID
1	ADAMS COLIN E	4429 FAIRGROUND RD	CELINA	OH	45822	11/22/2021	240,000	WDC : 982	☐	■
2							0	0	☐	☐
3							0	0	☐	☐

X: ☐ TTO LISTER: DATE: TIME: ☐ LETTER ☐ LETTER REC'D GIS CODE

STREET/ROAD	TOPOGRAPHY	PU-UTILITIES-PR	NEIGHBORHOOD	INFLUENCE FACTORS	
☐ PAVED	☐ LEVEL	☐ WATER ☐	☐ IMPROVING	☐ A. NO ROAD	☐ F. RESTRICT
☐ GRAVEL	☐ HIGH	☐ SEWER ☐	☐ STATIC	☐ B. TOPGRHY	☐ G. WOOD LT
☐ DIRT	☐ LOW	☐ GAS ☐	☐ DECLINING	☐ C. Ex Front	☐ H. VACANCY
☐ SIDEWALKS	☐ ROLLING	☐ ELECTRIC ☐	☐ OLD	☐ D. QUANTITY	☐ I. WATER FRONT
☐ CURBS	☐ STANDARD	☐ STANDARD	☐ STANDARD	☐ E. SZ/SHAPE	☐ J. OTHER/CDU

PROPERTY LOCATION
4429 FAIRGROUND RD

COMMENT
TY2022:Net Gen=$2,420.64, Other Assessment=$2.00
NC24 NEW OFP

LAND COMPUTATIONS

LAND TYPE	SIZE	M RATE C	INF	M VALUE C
HS:Home Site	AC:1	25440		25,400 0
SM:Small Acreage	AC:1.154	8300		9,600 0
Total Acres: 2.1540			TOTAL	35,000 0

VALUATION SUMMARY

VALUE YEAR		2023	2022	2022	2022	2022			
REASON FOR CHANGE		RAPP	MISC	RCLS	CAUV	MISC			
APPRAISED VALUE	LAND	35,000	29,700	31,400	18,240	27,590			
	IMPR	149,300	118,500	118,500	97,100	97,100			
	TOTAL	184,300	148,200	149,900	115,340	124,690			
ASSESSED VALUE	LAND	12,250	10,400	10,990	6,380	9,660			
	IMPR	52,260	41,480	41,480	33,990	33,990			
	TOTAL	64,510	51,880	52,470	40,370	43,650			

OCCUPANCY	EXTERIOR
■ SF ☐ DU ☐ TR	☐ WOOD
☐ CONVERSION	☐ STUCCO
BUILDING TYPE	■ ALM/VYNL
☐ MOBILE HOME	☐ CONC BLK
☐ BI/TR LEVEL	☐ METAL
☐ MOD/MAN	☐ BRICK
☐ _____	☐ STONE

ROOFING	ROOF TYPE
☐ METAL	■ GABLE
☐ SLT/TLE	☐ HIP
■ SHINGLES	☐ GAMBREL
☐ SHAKES	☐ MANSARD
☐ COMPOSITE	☐ FLAT

FLOORS	B	1	2	3	U
CONCRETE	☐	☐	☐	☐	☐
WOOD	☐	■	☐	☐	☐
TILE/COMPO	☐	☐	☐	☐	☐
CARPET	☐	■	■	☐	☐

INT. FINISH	B	1	2	3	U
PLASTER/DW	☐	■	■	☐	☐
PANELING	☐	☐	☐	☐	☐
UNFINISHED	■	☐	☐	☐	☐

ACCOMMODATIONS					
# OF ROOMS		4	3		
BEDROOMS		3	1		
FIREPLACES					

HEAT & AC	B	1	2	3	U
NO HEAT	☐	☐	☐	☐	☐
CTRL HEAT	☐	■	■	☐	☐
HW/STEAM	☐	☐	☐	☐	☐
ELECTRIC	☐	☐	☐	☐	☐
HEAT PUMP	☐	☐	☐	☐	☐
FLR/WALL	☐	☐	☐	☐	☐
STVE/SPCE	☐	☐	☐	☐	☐
GEOTHERMAL	☐	☐	☐	☐	☐
OUTSIDE	☐	☐	☐	☐	☐
CTRL A/C	☐	■	■	☐	☐

PLUMBING					BASE ■
X FULL BATH					
X HALF BATH					
X FIXTURES					

FLOOR	AREA	CONST	VALUE
1	840	FR	141,820
.75	426	FR	36,440
BSMT	142		2,030

SUBTOTAL			180,290
MULTI-FAMILY #	0		0
BUILDING TYPE	100%		0
BSMT FINISH	0	S.F.	0
FIREPLACE #	0		0
HEATING	0	S.F.	0
AIR COND	1,124	S.F.	1,860
PLUMBING #	0		0
GARAGES & CARPORTS			10,900
EXTRA FEATURES			12,300
SUBTOTAL			205,350
GRADE FACTOR			100 %
UNADJUSTED VALUE			205,350
FACTOR			100 %

SKETCH

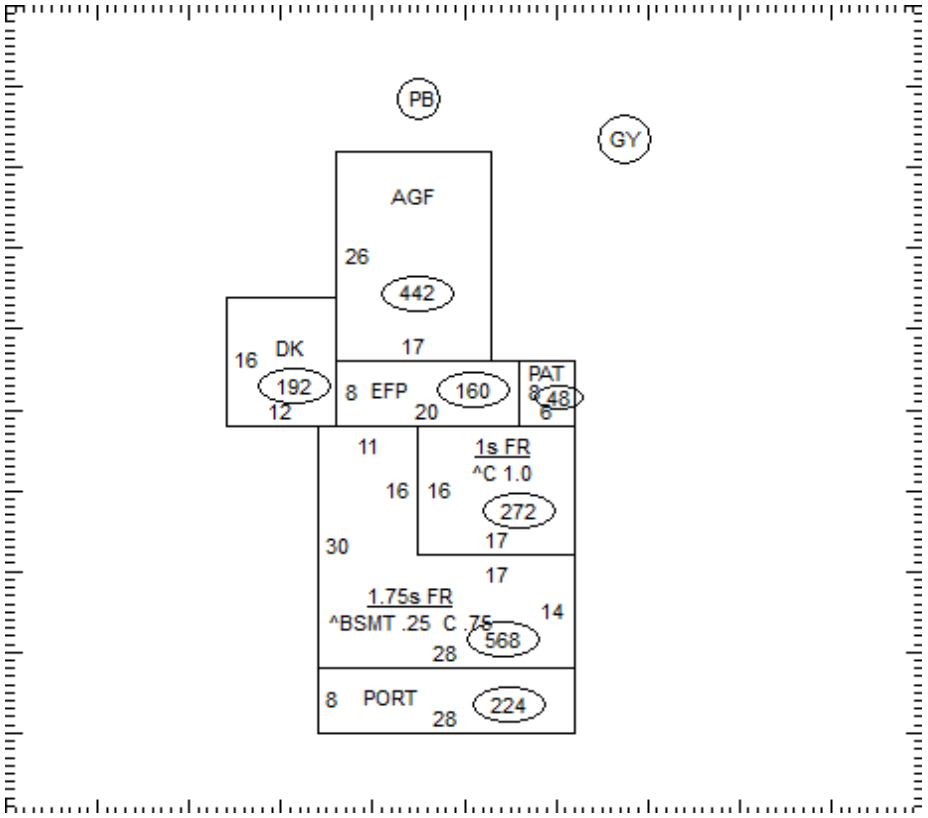

OCCUPANCY	ST.HT	SIZE	AREA	GRADE	PRICE	AGE	REMD	CND	UNADJ VAL	PHYS	PHYS VAL	FUNC	TRUE VAL
DWELLING	1.75	SK	1,266	C		1947		A	205,350	45	112,940		126,500
1 Granary	10	30x36	1,080	C	7.70	1950		A	8,320	95	420	DFLT50	200
2 Pole Bldg	14	54x75	4,050	C	10.51	1995		A	42,570	47	22,560		22,600
3													
4													
5													
6													
7													
8													
9													
10													
11													
												TOTAL	149,300

26-008400.0200

COMMENTS

Dwelling has an Economic Factor of 112%