23-046800.0000

NIEKAMP AARON & RINDLER CARLI
NIEKAMP AARON & RINDLER CARLI
451 E WASHINGTON ST
SAINT HENRY, OH 45883

GRANVILLE TWP-ST HENRY CORP / ST HENRY SD
11-21-203-024

LEGAL INFORMATION
OLD PLAT 87
ALSO W SD LOT 88

Property Class: 510
Neighborhood
002302-TM50
Map: 4B2
Block:
Card: 69
Bk: Pg:

	OWNERSHIP	ADDRESS	CITY	STATE	ZIP	DATE	AMOUNT	DEED:CONV#	JS	VALID
1	NIEKAMP AARON & RINDLER	451 E WASHINGTON ST	SAINT HENRY	OH	45883	04/23/2021	215,400	WDC : 293	☐	■
2	WUEBKER BRIAN D & GAIER	451 E WASHINGTON ST	SAINT HENRY	OH	45883	01/18/2011	149,000	WDC : A : 28	☐	■
3	ZIMMERMAN MATTHEW R &	451 E WASHINGTON ST	SAINT HENRY	OH	45883	01/27/2006	145,000	WDC : A : 61	☐	☐

X: ☐ TTO LISTER: JL DATE: 03/09/2012 TIME: 12:00:00 AM ☐ LETTER ☐ LETTER REC'D GIS CODE

STREET/ROAD	TOPOGRAPHY	PU-UTILITIES-PR	NEIGHBORHOOD	INFLUENCE FACTORS	
■ PAVED	■ LEVEL	☐ WATER ☐	☐ IMPROVING	☐ A. NO ROAD	☐ F. RESTRICT
☐ GRAVEL	☐ HIGH	☐ SEWER ☐	☐ STATIC	☐ B. TOPGRHY	☐ G. WOOD LT
☐ DIRT	☐ LOW	☐ GAS ☐	☐ DECLINING	☐ C. Ex Front	☐ H. VACANCY
☐ SIDEWALKS	☐ ROLLING	☐ ELECTRIC ☐	☐ OLD	☐ D. QUANTITY	☐ I. WATER FRONT
☐ CURBS	☐ STANDARD	■ STANDARD	☐ STANDARD	☐ E. SZ/SHAPE	☐ J. OTHER/CDU

PROPERTY LOCATION
451 E WASHINGTON ST, ST HENRY

COMMENT
TY2022:Net Gen=$2,073.98, Other Assessment=$0.00
DE15 RMV BSMNT ENT PER DATA MAILER
DE16 DESK TOP REVIEW//ADD PATIO & EFP
DE21 CLER ERR; ADJ GR FROM D+
DE22 DATA MAILER; UPDATE PLMG

LAND COMPUTATIONS

LAND TYPE	SIZE	M RATE C	INF	M VALUE C
F:Front	F10 D174	ST385 DP107 ADJ412		4,100 0
F:Front	F116 D161	ST385 DP103 ADJ397		46,100 0
			TOTAL	50,200 0

VALUATION SUMMARY

VALUE YEAR		2023	2022	2021	2020	2017			
REASON FOR CHANGE		RAPP	MISC	MISC	RAPP	RAPP			
APPRAISED VALUE	LAND	50,200	40,000	40,000	40,000	33,900			
	IMPR	148,800	114,800	113,800	80,700	66,100			
	TOTAL	199,000	154,800	153,800	120,700	100,000			
ASSESSED VALUE	LAND	17,570	14,000	14,000	14,000	11,870			
	IMPR	52,080	40,180	39,830	28,250	23,140			
	TOTAL	69,650	54,180	53,830	42,250	35,010			

OCCUPANCY	EXTERIOR
■ SF ☐ DU ☐ TR	☐ WOOD
☐ CONVERSION	☐ STUCCO
BUILDING TYPE	■ ALM/VYNL
☐ MOBILE HOME	☐ CONC BLK
☐ BI/TR LEVEL	☐ METAL
☐ MOD/MAN	☐ BRICK
☐ _____	☐ STONE
ROOFING	**ROOF TYPE**
☐ METAL	■ GABLE
☐ SLT/TLE	☐ HIP
■ SHINGLES	☐ GAMBREL
☐ SHAKES	☐ MANSARD
☐ COMPOSITE	☐ FLAT

FLOORS	B	1	2	3	U
CONCRETE	■	☐	☐	☐	☐
WOOD	☐	☐	☐	☐	☐
TILE/COMPO	☐	☐	☐	☐	☐
CARPET	☐	■	■	☐	☐

INT. FINISH	B	1	2	3	U
PLASTER/DW	☐	■	■	☐	☐
PANELING	☐	☐	☐	☐	☐
UNFINISHED	■	☐	☐	☐	☐

ACCOMMODATIONS					
# OF ROOMS		4	2		
BEDROOMS		2	1		
FIREPLACES					

HEAT & AC	B	1	2	3	U
NO HEAT	☐	☐	☐	☐	☐
CTRL HEAT	☐	■	■	☐	☐
HW/STEAM	☐	☐	☐	☐	☐
ELECTRIC	☐	☐	☐	☐	☐
HEAT PUMP	☐	☐	☐	☐	☐
FLR/WALL	☐	☐	☐	☐	☐
STVE/SPCE	☐	☐	☐	☐	☐
GEOTHERMAL	☐	☐	☐	☐	☐
OUTSIDE	☐	☐	☐	☐	☐
CTRL A/C	☐	■	■	☐	☐

PLUMBING					BASE ■
X FULL BATH		1			
X HALF BATH					
X FIXTURES					

FLOOR	AREA	CONST	VALUE
1	1228	FR	181,810
.25	168	FR	22,690
BSMT	168		2,400
SUBTOTAL			206,900
MULTI-FAMILY #	0		0
BUILDING TYPE	100%		0
BSMT FINISH	0 S.F.		0
FIREPLACE #	0		0
HEATING	0 S.F.		0
AIR COND	1,396 S.F.		2,310
PLUMBING #	3		3,630
GARAGES & CARPORTS			15,400
EXTRA FEATURES			5,000
SUBTOTAL			233,240
GRADE FACTOR			100 %
UNADJUSTED VALUE			233,240
FACTOR			100 %

SKETCH

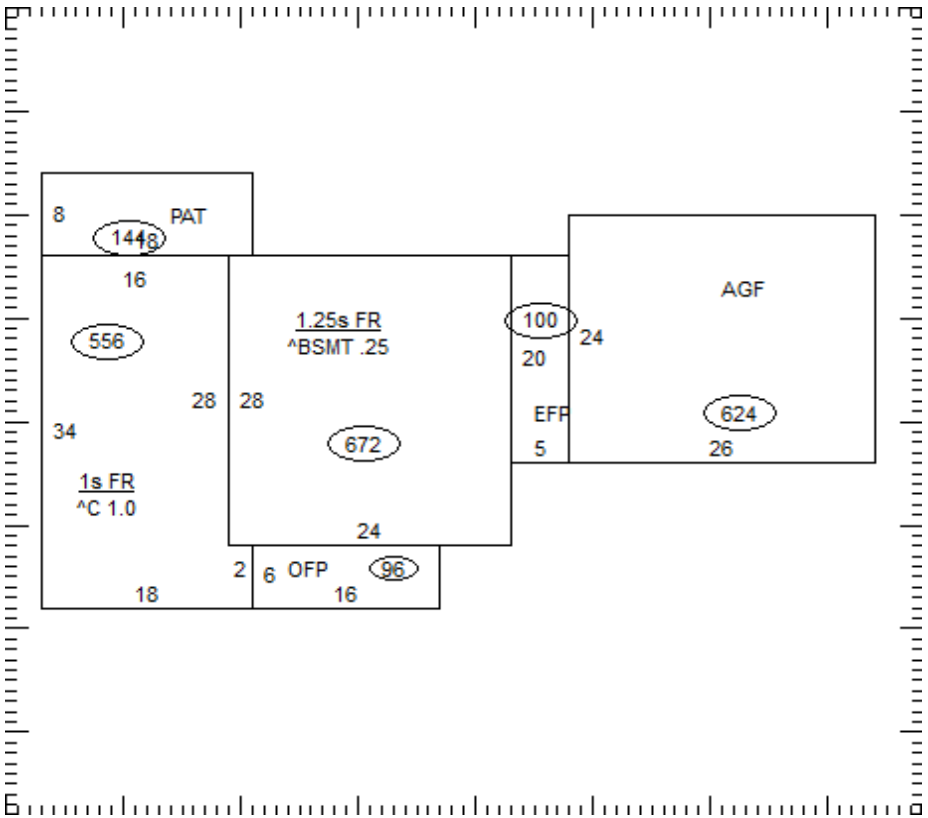

OCCUPANCY	ST.HT	SIZE	AREA	GRADE	PRICE	AGE	REMD	CND	UNADJ VAL	PHYS	PHYS VAL	FUNC	TRUE VAL
DWELLING	1.25	SK	1,396	C		1898	1957	A	233,240	42	135,280		148,800
1													
2													
3													
4													
5													
6													
7													
8													
9													
10													
11													
											TOTAL		148,800

23-046800.0000

COMMENTS

Dwelling has an Economic Factor of 110%

23-046800.0000

GRANVILLE TWP-ST HENRY CORP / ST HENRY SD
11-21-203-024

Property Class: 510
Neighborhood 002302-TM50
Map: 4B2
Block:
Card: 69
Bk: Pg:

NIEKAMP AARON & RINDLER CARLI
NIEKAMP AARON & RINDLER CARLI
451 E WASHINGTON ST
SAINT HENRY, OH 45883

LEGAL INFORMATION
OLD PLAT 87
ALSO W SD LOT 88

	OWNERSHIP	ADDRESS	CITY	STATE	ZIP	DATE	AMOUNT	DEED:CONV#	JS	VALID
1	POTTKOTTER THEODORE J &	2416 ST RTE 119	FORT RECOVERY	OH	45846	06/07/2004	57,500	WDC : A : 0	☐	■
2	RINDERLE LORETTA	451 E WASHINGTON ST	ST HENRY	OH	45883 -0193		0	: 0	☐	☐
3							0	0	☐	☐

X: ☐ TTO LISTER: JL DATE: 03/09/2012 TIME: 12:00:00 AM ☐ LETTER ☐ LETTER REC'D GIS CODE

STREET/ROAD	TOPOGRAPHY	PU-UTILITIES-PR	NEIGHBORHOOD	INFLUENCE FACTORS	
■ PAVED	■ LEVEL	☐ WATER ☐	☐ IMPROVING	☐ A. NO ROAD	☐ F. RESTRICT
☐ GRAVEL	☐ HIGH	☐ SEWER ☐	☐ STATIC	☐ B. TOPGRHY	☐ G. WOOD LT
☐ DIRT	☐ LOW	☐ GAS ☐	☐ DECLINING	☐ C. Ex Front	☐ H. VACANCY
☐ SIDEWALKS	☐ ROLLING	☐ ELECTRIC ☐	☐ OLD	☐ D. QUANTITY	☐ I. WATER FRONT
☐ CURBS	☐ STANDARD	■ STANDARD	☐ STANDARD	☐ E. SZ/SHAPE	☐ J. OTHER/CDU

PROPERTY LOCATION
451 E WASHINGTON ST, ST HENRY

COMMENT

LAND COMPUTATIONS

LAND TYPE	SIZE	M RATE C	INF	M VALUE C
			TOTAL	50,200 0

VALUATION SUMMARY

VALUE YEAR									
REASON FOR CHANGE									
APPRAISED VALUE	LAND								
	IMPR								
	TOTAL								
ASSESSED VALUE	LAND								
	IMPR								
	TOTAL								

OCCUPANCY	EXTERIOR
☐SF ☐DU ☐TR	☐ WOOD
☐CONVERSION	☐ STUCCO
BUILDING TYPE	☐ ALM/VYNL
☐ MOBILE HOME	☐ CONC BLK
☐ BI/TR LEVEL	☐ METAL
☐ MOD/MAN	☐ BRICK
☐ _____	☐ STONE

ROOFING	ROOF TYPE
☐ METAL	☐ GABLE
☐ SLT/TLE	☐ HIP
☐ SHINGLES	☐ GAMBREL
☐ SHAKES	☐ MANSARD
☐ COMPOSITE	☐ FLAT

FLOORS	B	1	2	3	U
CONCRETE	☐	☐	☐	☐	☐
WOOD	☐	☐	☐	☐	☐
TILE/COMPO	☐	☐	☐	☐	☐
CARPET	☐	☐	☐	☐	☐

INT. FINISH	B	1	2	3	U
PLASTER/DW	☐	☐	☐	☐	☐
PANELING	☐	☐	☐	☐	☐
UNFINISHED	☐	☐	☐	☐	☐

ACCOMMODATIONS					
# OF ROOMS					
BEDROOMS					
FIREPLACES					

HEAT & AC	B	1	2	3	U
NO HEAT	☐	☐	☐	☐	☐
CTRL HEAT	☐	☐	☐	☐	☐
HW/STEAM	☐	☐	☐	☐	☐
ELECTRIC	☐	☐	☐	☐	☐
HEAT PUMP	☐	☐	☐	☐	☐
FLR/WALL	☐	☐	☐	☐	☐
STVE/SPCE	☐	☐	☐	☐	☐
GEOTHERMAL	☐	☐	☐	☐	☐
OUTSIDE	☐	☐	☐	☐	☐
CTRL A/C	☐	☐	☐	☐	☐

PLUMBING					BASE ☐
X FULL BATH					
X HALF BATH					
X FIXTURES					

FLOOR	AREA	CONST	VALUE

SUBTOTAL		0
MULTI-FAMILY #	0	0
BUILDING TYPE	000%	0
BSMT FINISH	0 S.F.	0
FIREPLACE #	0	0
HEATING	0 S.F.	0
AIR COND	0 S.F.	0
PLUMBING #	0	0
GARAGES & CARPORTS		0
EXTRA FEATURES		0
SUBTOTAL		0
GRADE FACTOR		%
UNADJUSTED VALUE		0
FACTOR		%

SKETCH

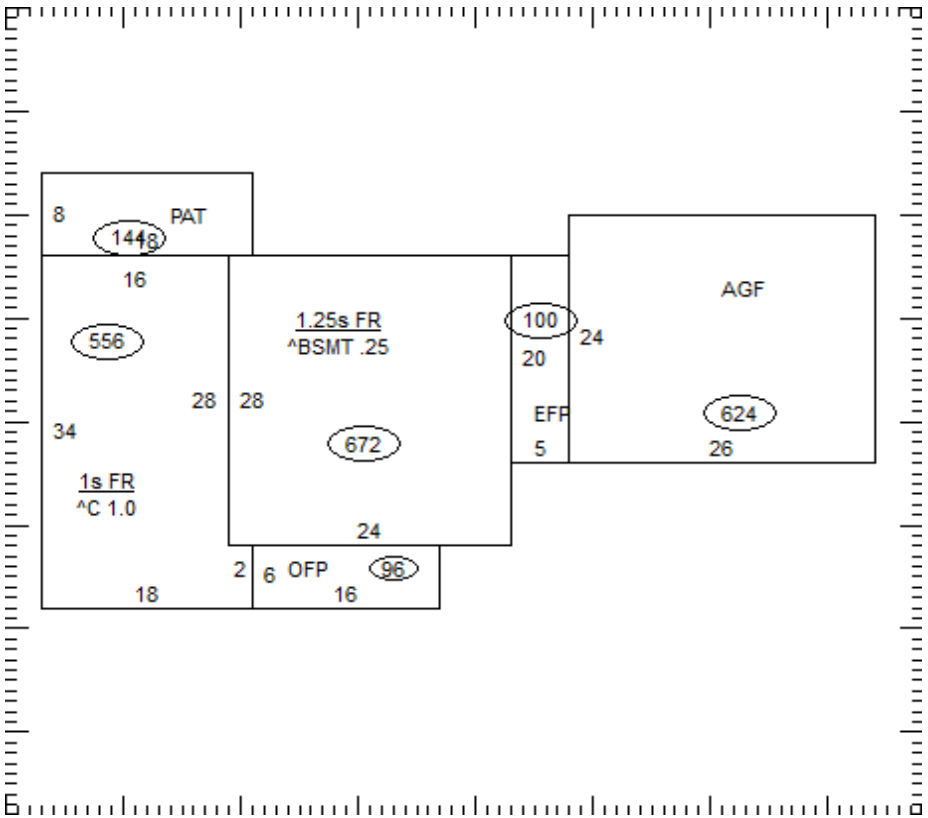

OCCUPANCY	ST.HT	SIZE	AREA	GRADE	PRICE	AGE	REMD	CND	UNADJ VAL	PHYS	PHYS VAL	FUNC	TRUE VAL
DWELLING		SK											
1													
2													
3													
4													
5													
6													
7													
8													
9													
10													
11													
												TOTAL	0

23-046800.0000

COMMENTS