23-024500.0000

RINDERLE MITCHELL J & KATELYN M
RINDERLE MITCHELL J & KATELYN M
412 E WASHINGTON ST
SAINT HENRY, OH 45883

GRANVILLE TWP-ST HENRY CORP / ST HENRY SD
11-21-206-001

LEGAL INFORMATION
OLD PLAT
PT LOT 47

Property Class: 510
Neighborhood
002302-TM50
Map: 04B2
Block:
Card: 40
Bk: Pg:

	OWNERSHIP	ADDRESS	CITY	STATE	ZIP	DATE	AMOUNT	DEED:CONV#	JS	VALID
1	RINDERLE MITCHELL J &	412 E WASHINGTON ST	SAINT HENRY	OH	45883	04/06/2022	310,000	SUC : 219	■	■
2	HOYING MICHAEL & LINDSAY	412 E WASHINGTON ST	SAINT HENRY	OH	45883	07/06/2015	223,500	WDC : 437	☐	■
3	FULLENKAMP MARK L &	412 E WASHINGTON ST	ST HENRY	OH	45883	03/23/1989	73,500	: A : 0	☐	■

X: ☐ TTO LISTER: CG DATE: 07/06/2011 TIME: 12:00:00 AM ☐ LETTER ☐ LETTER REC'D GIS CODE

STREET/ROAD	TOPOGRAPHY	PU-UTILITIES-PR	NEIGHBORHOOD	INFLUENCE FACTORS	
■ PAVED	■ LEVEL	☐ WATER ☐	☐ IMPROVING	☐ A. NO ROAD	☐ F. RESTRICT
☐ GRAVEL	☐ HIGH	☐ SEWER ☐	■ STATIC	☐ B. TOPGRHY	☐ G. WOOD LT
☐ DIRT	☐ LOW	☐ GAS ☐	☐ DECLINING	☐ C. Ex Front	☐ H. VACANCY
■ SIDEWALKS	☐ ROLLING	☐ ELECTRIC ☐	☐ OLD	☐ D. QUANTITY	☐ I. WATER FRONT
☐ CURBS	☐ STANDARD	■ STANDARD	☐ STANDARD	☐ E. SZ/SHAPE	☐ J. OTHER/CDU

PROPERTY LOCATION
412 E WASHINGTON ST, ST HENRY

COMMENT
TY2022:Net Gen=$2,497.28, Other Assessment=$0.00
DE11 RMV FNC
DE10 TTO; ADD SUNRM AT 75% COMP
de09 rmv wddk;verified aerial
DE16 DESK TOP REVIEW//CORR SKETCH

LAND COMPUTATIONS

LAND TYPE	SIZE	M RATE C	INF	M VALUE C
F:Front	F98 D150	ST385 DP100 ADJ385		37,700 0
			TOTAL	37,700 0

VALUATION SUMMARY

VALUE YEAR		2023	2022	2020	2017				
REASON FOR CHANGE		RAPP	MISC	RAPP	RAPP				
APPRAISED VALUE	LAND	37,700	30,100	30,100	25,500				
	IMPR	200,800	160,700	158,000	134,800				
	TOTAL	238,500	190,800	188,100	160,300				
ASSESSED VALUE	LAND	13,200	10,540	10,540	8,930				
	IMPR	70,280	56,250	55,300	47,180				
	TOTAL	83,480	66,790	65,840	56,110				

OCCUPANCY	EXTERIOR
■ SF ☐ DU ☐ TR	■ WOOD
☐ CONVERSION	☐ STUCCO
BUILDING TYPE	☐ ALM/VYNL
☐ MOBILE HOME	☐ CONC BLK
☐ BI/TR LEVEL	☐ METAL
☐ MOD/MAN	■ BRICK
☐ _____	☐ STONE

ROOFING	ROOF TYPE
☐ METAL	■ GABLE
☐ SLT/TLE	☐ HIP
■ SHINGLES	☐ GAMBREL
☐ SHAKES	☐ MANSARD
☐ COMPOSITE	☐ FLAT

FLOORS	B	1	2	3	U
CONCRETE	■	☐	☐	☐	☐
WOOD	☐	☐	☐	☐	☐
TILE/COMPO	■	☐	☐	☐	☐
CARPET	■	☐	■	☐	☐

INT. FINISH	B	1	2	3	U
PLASTER/DW	☐	☐	■	■	☐
PANELING	■	☐	☐	☐	☐
UNFINISHED	■	☐	☐	☐	☐

ACCOMMODATIONS					
# OF ROOMS	3		4	2	
BEDROOMS			1	2	
FIREPLACES			1		

HEAT & AC	B	1	2	3	U
NO HEAT	☐	☐	☐	☐	☐
CTRL HEAT	■	■	■	■	☐
HW/STEAM	☐	☐	☐	☐	☐
ELECTRIC	☐	☐	☐	☐	☐
HEAT PUMP	☐	☐	☐	☐	☐
FLR/WALL	☐	☐	☐	☐	☐
STVE/SPCE	☐	☐	☐	☐	☐
GEOTHERMAL	☐	☐	☐	☐	☐
OUTSIDE	☐	☐	☐	☐	☐
CTRL A/C	■	■	■	■	☐

PLUMBING				BASE ■	
X FULL BATH	1				
X HALF BATH				1	
X FIXTURES					

FLOOR	AREA	CONST	VALUE
1	192	FR	25,250
1	1400	BRK	196,990
.25	300	BRK	38,500
BSMT	1400		20,020

SUBTOTAL		280,760
MULTI-FAMILY #	0	0
BUILDING TYPE	100%	0
BSMT FINISH	428 S.F.	6,120
FIREPLACE #	1	4,400
HEATING	0 S.F.	0
AIR COND	2,320 S.F.	3,840
PLUMBING #	5	6,050
GARAGES & CARPORTS		10,700
EXTRA FEATURES		4,200
SUBTOTAL		316,070
GRADE FACTOR		105 %
UNADJUSTED VALUE		331,870
FACTOR		100 %

SKETCH

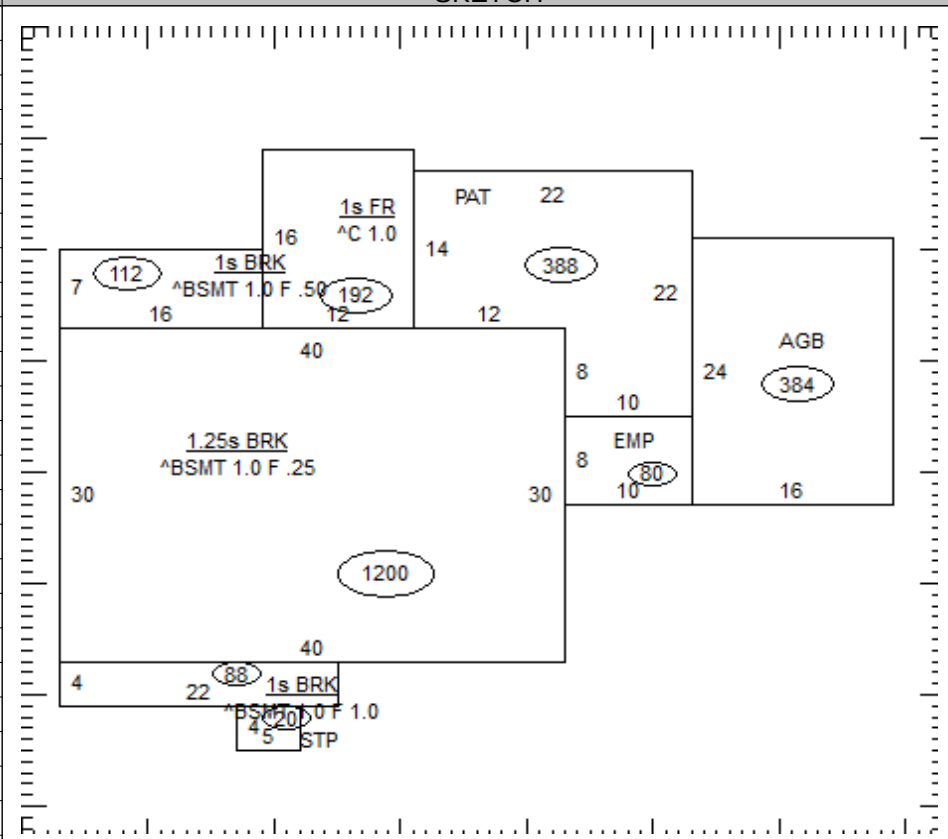

OCCUPANCY	ST.HT	SIZE	AREA	GRADE	PRICE	AGE	REMD	CND	UNADJ VAL	PHYS	PHYS VAL	FUNC	TRUE VAL
DWELLING	1.25	SK	1,892	C+		1948		A	331,870	45	182,530		200,800
1													
2													
3													
4													
5													
6													
7													
8													
9													
10													
11													
											TOTAL		200,800

23-024500.0000

COMMENTS

Dwelling has an Economic Factor of 110%