23-000100.0000

SCHMITZ BRADY P & MARIAH L
SCHMITZ BRADY P & MARIAH L
151 E KREMER HOYING RD
SAINT HENRY, OH 45883

GRANVILLE TWP-ST HENRY CORP / ST HENRY SD
11-16-378-007

LEGAL INFORMATION
SE COR SW SEC
UNPLATTED AREA
RTS: 002-07-16

Property Class: 510
Neighborhood 002302-TM50
Map: 04A5
Block:
Card: 53
Bk: Pg:

	OWNERSHIP	ADDRESS	CITY	STATE	ZIP	DATE	AMOUNT	DEED:CONV#	JS	VALID
1	SCHMITZ BRADY P & MARIAH L	151 E KREMER HOYING RD	SAINT HENRY	OH	45883	12/27/2017	250,000	WDC : 897	☐	■
2	MAY CHRIS H & ROBIN A	151 E KREMER HOYING RD	ST HENRY	OH	45883	10/22/1993	51,600	: A : 0	☐	☐
3							0	0	☐	☐

X: ☐ TTO LISTER: TK DATE: 07/11/2023 TIME: 12:00:00 AM ☐ LETTER ☐ LETTER REC'D GIS CODE

STREET/ROAD	TOPOGRAPHY	PU-UTILITIES-PR	NEIGHBORHOOD	INFLUENCE FACTORS	
■ PAVED	■ LEVEL	☐ WATER ☐	☐ IMPROVING	☐ A. NO ROAD	☐ F. RESTRICT
☐ GRAVEL	☐ HIGH	☐ SEWER ☐	■ STATIC	☐ B. TOPGRHY	☐ G. WOOD LT
☐ DIRT	☐ LOW	☐ GAS ☐	☐ DECLINING	☐ C. Ex Front	☐ H. VACANCY
■ SIDEWALKS	☐ ROLLING	☐ ELECTRIC ☐	☐ OLD	☐ D. QUANTITY	☐ I. WATER FRONT
☐ CURBS	☐ STANDARD	■ STANDARD	☐ STANDARD	☐ E. SZ/SHAPE	☐ J. OTHER/CDU

PROPERTY LOCATION
151 E KREMER HOYING RD, ST HENRY

COMMENT
TY2022:Net Gen=$3,413.74, Other Assessment=$0.00
DE18 RMV OWN OCC. Did not return app
DE22 DESKTOP RVW; ADD GAS FP
DE23 NOH; CONV WDDK TO OFP & PAT

LAND COMPUTATIONS

LAND TYPE	SIZE	M RATE C	INF	M VALUE C
F:Front	F103 D185	ST385 DP110 ADJ424		43,700 0
			TOTAL	43,700 0

VALUATION SUMMARY

VALUE YEAR		2023	2022	2020	2017				
REASON FOR CHANGE		NC	MISC	RAPP	MISC				
APPRAISED VALUE	LAND	43,700	34,800	34,800	29,500				
	IMPR	267,300	220,000	215,700	136,400				
	TOTAL	311,000	254,800	250,500	165,900				
ASSESSED VALUE	LAND	15,300	12,180	12,180	10,330				
	IMPR	93,560	77,000	75,500	47,740				
	TOTAL	108,860	89,180	87,680	58,070				

OCCUPANCY	EXTERIOR
■ SF ☐ DU ☐ TR	☐ WOOD
☐ CONVERSION	☐ STUCCO
BUILDING TYPE	■ ALM/VYNL
☐ MOBILE HOME	☐ CONC BLK
☐ BI/TR LEVEL	☐ METAL
☐ MOD/MAN	☐ BRICK
☐ _____	☐ STONE

ROOFING	ROOF TYPE
☐ METAL	■ GABLE
☐ SLT/TLE	☐ HIP
■ SHINGLES	☐ GAMBREL
☐ SHAKES	☐ MANSARD
☐ COMPOSITE	☐ FLAT

FLOORS	B	1	2	3	U
CONCRETE	■	☐	☐	☐	☐
WOOD	☐	■	■	☐	☐
TILE/COMPO	☐	■	■	☐	☐
CARPET	☐	☐	☐	☐	☐

INT. FINISH	B	1	2	3	U
PLASTER/DW	☐	■	■	☐	☐
PANELING	☐	☐	☐	☐	☐
UNFINISHED	■	☐	☐	☐	☐

ACCOMMODATIONS					
# OF ROOMS	2	5	3		
BEDROOMS		1	3		
FIREPLACES		1			

HEAT & AC	B	1	2	3	U
NO HEAT	☐	☐	☐	☐	☐
CTRL HEAT	☐	■	■	☐	☐
HW/STEAM	☐	☐	☐	☐	☐
ELECTRIC	☐	☐	☐	☐	☐
HEAT PUMP	☐	☐	☐	☐	☐
FLR/WALL	☐	☐	☐	☐	☐
STVE/SPCE	☐	☐	☐	☐	☐
GEOTHERMAL	☐	☐	☐	☐	☐
OUTSIDE	☐	☐	☐	☐	☐
CTRL A/C	☐	■	☐	☐	☐

PLUMBING					BASE ■
X FULL BATH		1			
X HALF BATH					
X FIXTURES					

FLOOR	AREA	CONST	VALUE
1	1720	FR	216,270
2ND	949	FR	57,270
BSMT	1261		18,030
SUBTOTAL			291,570
MULTI-FAMILY #		0	0
BUILDING TYPE		100%	0
BSMT FINISH		0 S.F.	0
FIREPLACE #		1	4,400
HEATING		0 S.F.	0
AIR COND		1,720 S.F.	2,840
PLUMBING #		3	3,630
GARAGES & CARPORTS			0
EXTRA FEATURES			11,900
SUBTOTAL			314,340
GRADE FACTOR			105 %
UNADJUSTED VALUE			330,060
FACTOR			100 %

SKETCH

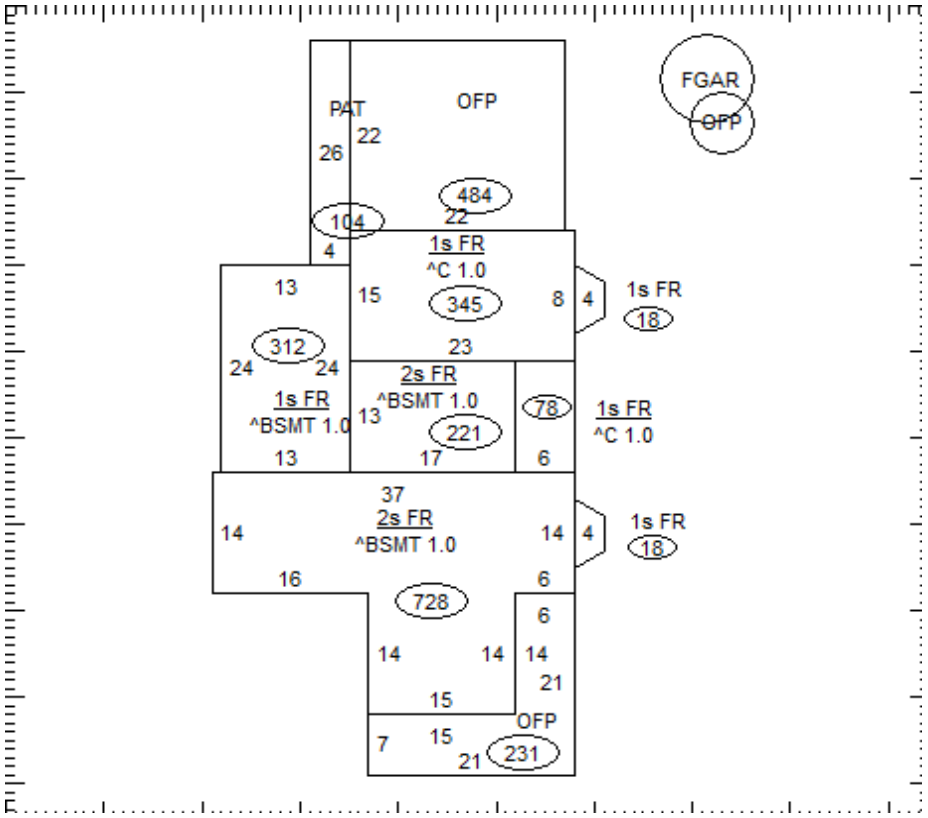

OCCUPANCY	ST.HT	SIZE	AREA	GRADE	PRICE	AGE	REMD	CND	UNADJ VAL	PHYS	PHYS VAL	FUNC	TRUE VAL
DWELLING	2	SK	2,669	C+		1902	1994	A	330,060	30	231,040		254,100
1 OFP	10	6x30	180	C	16.04	1997		A	2,890	47	1,530		1,500
2 Gar - Frame	1.25	24x30	720	B	28.44	1997		A	20,480	43	11,670		11,700
3													
4													
5													
6													
7													
8													
9													
10													
11													
											TOTAL		267,300

23-000100.0000

COMMENTS

Dwelling has an Economic Factor of 110%