Business Name: BROCKMAN & BOECKMAN FUNERAL HO
Property Address: 308 S WAYNE ST DTE Code: 441

17-037800.0000

GIBSON TWP-FT RECOVERY CORP
FT RECOVERY SD
13-16-130-012

LEGAL INFORMATION

11 S 1/2 M P B ADDITION
ALSO 1/2 FORMER
LOT#: 11

FEE JON E & KRISTIN M
FEE JON E & KRISTIN M
6335 FAIRWAY CT
GREENVILLE, OH 45331

Neighborhood CVIL17	
Map: 4C	
Block:	
Card: 15	
Bk:	Pg:

COMMENT
TY2022:Net Gen=$1,741.16, Other Assessment=$2.00
PART OG BLDG SETS ON 17-037300.0000
DE17 DESKTOP RVW CHGS: ADJ PRICING
DE23 RMV AC; DESKTOP RVW

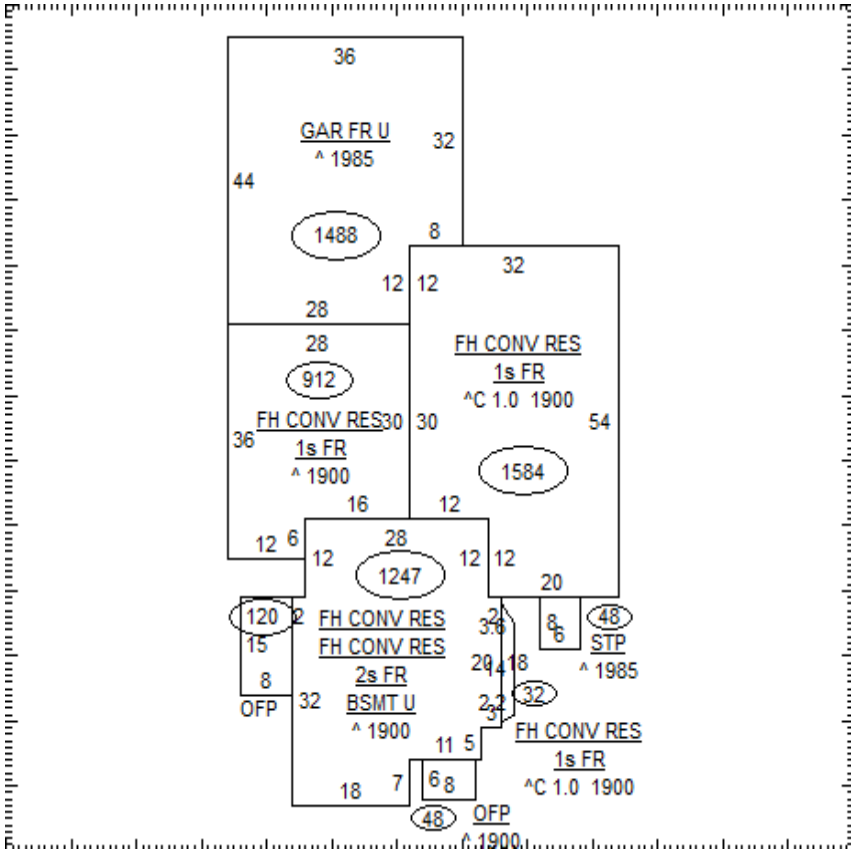

Sales Data						Date
Date	Amount	Deed:Conv#	Use	Valid	Lister:	03/29/23
02/02/2021	150,000	3:WDC : 94	441	■	Pricer:	
01/11/1991	100,000	: A-M : 0	441	☐	Reviewer:	
				☐	Final:	
				☐	Call Back:	
				☐	Visit:	

VALUATION SUMMARY					
VALUE YEAR		2023	2020	2017	2017
REASON FOR CHANGE		RAPP	RAPP	RAPP	MISC
ESTIMATED MARKET VALUE	LAND	8,450	5,610	5,610	5,610
	IMPR	123,950	97,990	98,360	99,970
	TOTAL	132,400	103,600	103,970	105,580
ASSESSED VALUE	LAND	2,960	1,960	1,960	1,960
	IMPR	43,380	34,300	34,430	34,990
	TOTAL	46,340	36,260	36,390	36,950

STREET/ROAD	TOPOGRAPHY	PU-UTILITIES-PR		ZONING
☐ PAVED	☐ LEVEL	☐ WATER	☐	☐ AG-RES
☐ GRAVEL	☐ HIGH	☐ SEWER	☐	■ COMMERCIAL
☐ DIRT	☐ LOW	☐ GAS	☐	☐ INDUSTRIAL
☐ SIDEWALKS	☐ ROLLING	☐ ELECTRIC	☐	
☐ CURBS	☐ STANDARD	■ STANDARD		

INFLUENCE FACTORS		
A. NO ROAD	E. SZ/SHAPE	I. WATER FRONT
B. TOPGRHY	F. RESTRICT	J. OTHER/CDU
C. Ex Front	G. WOOD LT	
D. QUANTITY	H. VACANCY	

LAND TYPE	SIZE	M RATE C	INF	M VALUE C	
F:Front	F66 D109	ST150 DP85 ADJ128		8,450 0	
Totals:				8,450 0	8,450

CLASS/QUALITY RANK	
A) FP STRUCT. STEEL FRAME	1. BASIC
B) R.C. FRAME	2. FAIR
C) MASONRY BEARING WALLS	3. AVE
D) WD OR STEEL FR EX. WALLS	4. GOOD
S) METAL M) MILL P) POLE	5. EXCEL
TOTAL AREA	**PERIMETER** 0
# STORIES	**STORY HT**
AGE	**SPRINKLER**

EX WALL	A	ROOFING	A	WINDOW	A	DOORS	A	FOUNDATION	A	FRAMING	A
STONE	☐	GABLE/HIP	☐	STORE FRT	☐	OVERHEAD		SLAB	☐	PRE ENG	☐
BRICK	☐	SHED/FLAT	☐	CASEMENT	☐			CRAWL	☐	STEEL	☐
CON BLK	☐	CON DECK	☐	DBLH	☐			PILE/COL	☐	REINF CONC	☐
WD/MTL	☐	MTL DECK	☐	SLIDE BY	☐			REINFOR	☐	CB/MASON	☐
ENAM STL	☐	WD DECK	☐	**CANOPY**	A			STEEL	☐	FRAME	☐
ALUM/VYL	☐	METAL	☐	LIGHTED	☐	STEEL INS	☐	BRICK	☐	POLE	☐
CON PANEL	☐	ASPH	☐	SOFFITS	☐	WOOD	☐	STONE	☐	TILT UP	☐
PLATE GLS	☐	RUBBER	☐	C S W	☐	MTL	☐	CON BLK	☐	SANDWICH	☐
STUCCO	☐	BUILT UP	☐	**FACADE**	A	GLASS	☐	FRAME	☐	STANDARD	☐
INSULATED	☐	INSULATED	☐			STANDARD	☐	STANDARD	☐		

H.V.A.C.			
Electric	☐	Electric Wall	☐
Forced Air Unit	☐	Hot Water	☐
Hot Water, Rad	☐	Space/ Wall Furnace	☐
Steam	☐	Warm & Cld Air	☐
Ventilation	☐	Heat Pump	☐
Package Unit	☐	Ind TW Heat Pump	☐
Hot & Cld Water	☐	Evaporated Cool	☐
Floor Furnace	☐	Co-Ray-Vac	☐
Complete HVAC	☐	No Heat	☐
Refrig. Cooling	☐	Standard	☐

FLOORS	B	1	2	3	U
CONCRETE	☐	☐	☐	☐	☐
WOOD	☐	☐	☐	☐	☐
TILE A Q V T	☐	☐	☐	☐	☐
CARPET	☐	☐	☐	☐	☐
ASPHALT	☐	☐	☐	☐	☐
GRAVEL	☐	☐	☐	☐	☐
DIRT	☐	☐	☐	☐	☐
STANDARD	☐				

PARTITIONS	B	1	2	3	U
MASONRY	☐	☐	☐	☐	☐
WD STUD	☐	☐	☐	☐	☐
MTL STUD	☐	☐	☐	☐	☐
CEILINGS	**B**	**1**	**2**	**3**	**U**
ACCUT/PANEL	☐	☐	☐	☐	☐
PLASTER/DW	☐	☐	☐	☐	☐
SUSP/OPEN	☐	☐	☐	☐	☐
STANDARD	☐				

INTERIOR FINISH	B	1	2	3	U
UNFINISHED	☐	☐	☐	☐	☐
FINISH OPEN	☐	☐	☐	☐	☐
FINISH DIV	☐	☐	☐	☐	☐
PANEL	☐	☐	☐	☐	☐
PLASTER / DW	☐	☐	☐	☐	☐
BLOCK	☐	☐	☐	☐	☐
GLAZED TILE	☐	☐	☐	☐	☐
STANDARD	☐				

PLUMBING	A		A
NO PLUMBING	☐	EXTRA FIXTURES	
2 FIXTURE BATH		STANDARD	☐
3 FIXTURE BATH			

LIGHTING	A		A
FLUORESCENT	☐	METAL HALIDE	☐
SODIUM VAP	☐	STANDARD	☐
MERCURY VAP	☐		

YARD ITEMS

	ITEM	CONST	HT	SIZE X SIZE	FL	AREA	UNITS	AGE	REM	CND	GRD	$/UNIT	UNADJUSTED $	PHY	FC	EC	MARKET VALUE
A	441.001:FH CONV RES				1	1,247		1900	1985A	G	B	45.00	56,120	63	0	0	20,760
1	900.050:BSMT U				1	1,247		1900	1985A	G	B	15.00	18,710	63	0	0	6,920
2	441.001:FH CONV RES				1	1,247		1900	1985A	G	B	45.00	56,120	63	0	0	20,760
3	441.001:FH CONV RES				1	32		1900	1985A	G	B	45.00	1,440	63	0	0	530
4	441.001:FH CONV RES				1	1,584		1900	1985A	G	B	45.00	71,280	63	0	0	26,370
5	441.001:FH CONV RES				1	912		1900	1985A	A	B	45.00	41,040	67	0	0	13,540
6	499.029:GAR FR U				1	1,488		1985		A	A	33.00	49,100	30	0	0	34,370
7	499.054:OFP			15 X 8	1	120		1900	1985A	G	A	10.00	1,200	58	0	0	500
8	499.054:OFP			6 X 8	1	48		1900	1985A	G	A	10.00	480	58	0	0	200
9	901.024:STP			8 X 6	1	48		1985		G	A	.00	0	26	0	0	0
AMENITY TOTAL																	0
																TOTAL IMPR	123,950

COMMENTS