17-010120.0227

ALBERS RENTALS LLC
ALBERS RENTALS LLC
1961 FLALER RD
FORT RECOVERY, OH 45846

GIBSON TWP-FT RECOVERY CORP / FT RECOVERY SD
13-16-228-001

LEGAL INFORMATION
INDIAN HEIGHTS SUBD
PHASE II PLATTED 4/2/97
LOT#: 27

Property Class: 530
Neighborhood
001705-TS40
Map: 04D
Block:
Card: 06
Bk: Pg:

	OWNERSHIP	ADDRESS	CITY	STATE	ZIP	DATE	AMOUNT	DEED:CONV#	JS	VALID
1	ALBERS RENTALS LLC	1961 FLALER RD	FORT RECOVERY	OH	45846	07/06/2021	480,000	2:WDC : 522	☐	■
2	RUNNING DEER APARTMENTS	384 POST RD	FORT RECOVERY	OH	45846	10/03/2017	0	2:QCE : X : 0	☐	☐
3	RUNNING DEER APARTMENTS	PO BOX 696	FT RECOVERY	OH	45846	06/09/1997	16,000	: A : 0	☐	■

X: ☐ TTO LISTER: NS DATE: 08/09/2004 TIME: 02:55:13 PM ■ LETTER ☐ LETTER REC'D GIS CODE

STREET/ROAD	TOPOGRAPHY	PU-UTILITIES-PR	NEIGHBORHOOD	INFLUENCE FACTORS	
■ PAVED	■ LEVEL	☐ WATER ☐	■ IMPROVING	☐ A. NO ROAD	☐ F. RESTRICT
☐ GRAVEL	☐ HIGH	☐ SEWER ☐	☐ STATIC	☐ B. TOPGRHY	☐ G. WOOD LT
☐ DIRT	☐ LOW	☐ GAS ☐	☐ DECLINING	☐ C. Ex Front	☐ H. VACANCY
☐ SIDEWALKS	☐ ROLLING	☐ ELECTRIC ☐	☐ OLD	☐ D. QUANTITY	☐ I. WATER FRONT
☐ CURBS	☐ STANDARD	■ STANDARD	☐ STANDARD	☐ E. SZ/SHAPE	☐ J. OTHER/CDU

PROPERTY LOCATION
701 BLACK EAGLE DR

COMMENT
TY2022:Net Gen=$2,523.42, Other Assessment=$0.00
705 BLACK EAGLE DR 703 BLACK EAGLE DR
TriDwell=75

LAND COMPUTATIONS

LAND TYPE	SIZE	M RATE C	INF	M VALUE C
F:Front	F98 D108	ST350 DP84 ADJ294		28,800 0
			TOTAL	28,800 0

VALUATION SUMMARY

VALUE YEAR		2023	2020	2017					
REASON FOR CHANGE		RAPP	RAPP	RAPP					
APPRAISED VALUE	LAND	28,800	14,000	14,400					
	IMPR	224,200	171,500	167,900					
	TOTAL	253,000	185,500	182,300					
ASSESSED VALUE	LAND	10,080	4,900	5,040					
	IMPR	78,470	60,030	58,770					
	TOTAL	88,550	64,930	63,810					

OCCUPANCY	EXTERIOR
☐SF ☐DU ■TR	■ WOOD
☐CONVERSION	☐ STUCCO
BUILDING TYPE	☐ ALM/VYNL
☐ MOBILE HOME	☐ CONC BLK
☐ BI/TR LEVEL	☐ METAL
☐ MOD/MAN	☐ BRICK
☐ _____	☐ STONE

ROOFING	ROOF TYPE
☐ METAL	■ GABLE
☐ SLT/TLE	☐ HIP
■ SHINGLES	☐ GAMBREL
☐ SHAKES	☐ MANSARD
☐ COMPOSITE	☐ FLAT

FLOORS	B	1	2	3	U
CONCRETE	☐	☐	☐	☐	☐
WOOD	☐	☐	☐	☐	☐
TILE/COMPO	☐	■	☐	☐	☐
CARPET	☐	■	☐	☐	☐

INT. FINISH	B	1	2	3	U
PLASTER/DW	☐	■	☐	☐	☐
PANELING	☐	☐	☐	☐	☐
UNFINISHED	☐	☐	☐	☐	☐

ACCOMMODATIONS					
# OF ROOMS		9			
BEDROOMS		6			
FIREPLACES					

HEAT & AC	B	1	2	3	U
NO HEAT	☐	☐	☐	☐	☐
CTRL HEAT	☐	■	☐	☐	☐
HW/STEAM	☐	☐	☐	☐	☐
ELECTRIC	☐	☐	☐	☐	☐
HEAT PUMP	☐	☐	☐	☐	☐
FLR/WALL	☐	☐	☐	☐	☐
STVE/SPCE	☐	☐	☐	☐	☐
GEOTHERMAL	☐	☐	☐	☐	☐
OUTSIDE	☐	☐	☐	☐	☐
CTRL A/C	☐	■	☐	☐	☐

PLUMBING				BASE ■
X FULL BATH		2		
X HALF BATH				
X FIXTURES				

FLOOR	AREA	CONST	VALUE
1	3186	FR	327,650

SUBTOTAL		327,650
MULTI-FAMILY #	2	5,000
BUILDING TYPE	100%	0
BSMT FINISH	0 S.F.	0
FIREPLACE #	0	0
HEATING	0 S.F.	0
AIR COND	3,186 S.F.	5,260
PLUMBING #	6	7,260
GARAGES & CARPORTS		22,800
EXTRA FEATURES		6,600
SUBTOTAL		374,570
GRADE FACTOR		105 %
UNADJUSTED VALUE		294,970
FACTOR		100 %

SKETCH

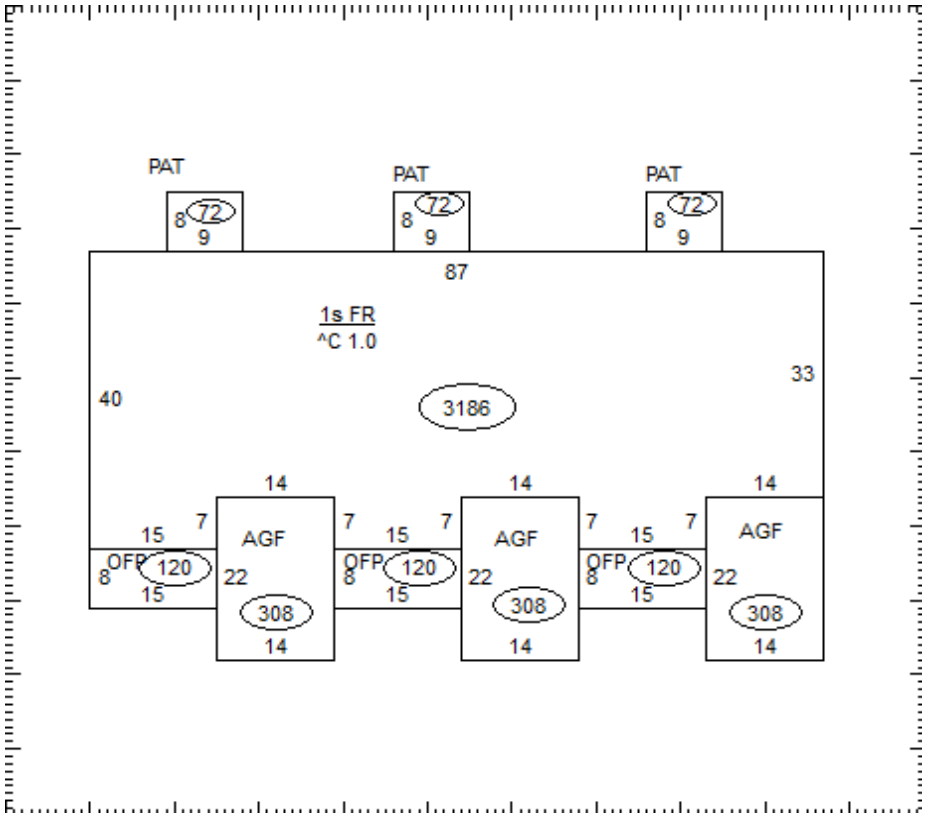

OCCUPANCY	ST.HT	SIZE	AREA	GRADE	PRICE	AGE	REMD	CND	UNADJ VAL	PHYS	PHYS VAL	FUNC	TRUE VAL
DWELLING	1	SK	3,186	C+		1997		A	294,970	24	224,180		224,200
1													
2													
3													
4													
5													
6													
7													
8													
9													
10													
11													
											TOTAL		224,200

17-010120.0227

COMMENTS

BRICK TRIM: 115 X 8
Dwelling has an Economic Factor of 100%