17-010120.0205

WESTGERDES STEVEN D & ROSEGRANT ALISON
WESTGERDES STEVEN D & ROSEGRANT ALISON
PO BOX 17
FORT RECOVERY, OH 45846

GIBSON TWP-FT RECOVERY CORP / FT RECOVERY SD
13-16-226-005

LEGAL INFORMATION
INDIAN HEIGHTS SUBD

LOT#: 5

Property Class: 510
Neighborhood
001705-TS40
Map: 04D
Block:
Card: 41
Bk: Pg:

	OWNERSHIP	ADDRESS	CITY	STATE	ZIP	DATE	AMOUNT	DEED:CONV#	JS	VALID
1	WESTGERDES STEVEN D &	PO BOX 17	FORT RECOVERY	OH	45846	12/08/2017	267,500	WDC : 843	☐	■
2	HEMMELGARN BENJAMIN A	709 BLUE JACKET DR	FORT RECOVERY	OH	45846	01/02/2014	179,000	WDC : 1	☐	■
3	PAX RICHARD & ELAINE	1110 ST RTE 49	FT RECOVERY	OH	45846	09/08/2000	18,500	: A : 0	☐	☐

X: ☐ TTO LISTER: HK DATE: 04/29/2021 TIME: 12:00:00 AM ☐ LETTER ☐ LETTER REC'D GIS CODE

STREET/ROAD	TOPOGRAPHY	PU-UTILITIES-PR		NEIGHBORHOOD	INFLUENCE FACTORS	
■ PAVED	■ LEVEL	☐ WATER	☐	■ IMPROVING	☐ A. NO ROAD	☐ F. RESTRICT
☐ GRAVEL	☐ HIGH	☐ SEWER	☐	☐ STATIC	☐ B. TOPGRHY	☐ G. WOOD LT
☐ DIRT	☐ LOW	☐ GAS	☐	☐ DECLINING	☐ C. Ex Front	☐ H. VACANCY
☐ SIDEWALKS	☐ ROLLING	☐ ELECTRIC	☐	☐ OLD	☐ D. QUANTITY	☐ I. WATER FRONT
☐ CURBS	☐ STANDARD	■ STANDARD		☐ STANDARD	☐ E. SZ/SHAPE	☐ J. OTHER/CDU

PROPERTY LOCATION
709 BLUE JACKET DR

COMMENT
TY2022:Net Gen=$2,629.50, Other Assessment=$0.00
DE16 DESKTOP REVIEW add pat
DE13 CORR BATHS PER REALTOR LISTING/ FOR SALE $199,999
DE18 RMV OWN OCC. Did not return app
DE21 ADD PATS

LAND COMPUTATIONS

LAND TYPE	SIZE	M RATE C	INF	M VALUE C
F:Front	F125 D125	ST350 DP91 ADJ319		39,900 0
			TOTAL	39,900 0

VALUATION SUMMARY

		2023	2021	2020	2017
VALUE YEAR		2023	2021	2020	2017
REASON FOR CHANGE		RAPP	NC	RAPP	RAPP
APPRAISED VALUE	LAND	39,900	24,600	24,600	19,900
	IMPR	239,900	168,700	162,100	148,500
	TOTAL	279,800	193,300	186,700	168,400
ASSESSED VALUE	LAND	13,970	8,610	8,610	6,970
	IMPR	83,970	59,050	56,740	51,980
	TOTAL	97,940	67,660	65,350	58,950

OCCUPANCY	EXTERIOR
■ SF ☐ DU ☐ TR	☐ WOOD
☐ CONVERSION	☐ STUCCO
BUILDING TYPE	■ ALM/VYNL
☐ MOBILE HOME	☐ CONC BLK
☐ BI/TR LEVEL	☐ METAL
☐ MOD/MAN	■ BRICK
☐ _____	☐ STONE

ROOFING	ROOF TYPE
☐ METAL	■ GABLE
☐ SLT/TLE	☐ HIP
■ SHINGLES	☐ GAMBREL
☐ SHAKES	☐ MANSARD
☐ COMPOSITE	☐ FLAT

FLOORS	B	1	2	3	U
CONCRETE	■	☐	☐	☐	☐
WOOD	☐	☐	☐	☐	☐
TILE/COMPO	☐	■	☐	☐	☐
CARPET	☐	■	■	☐	☐

INT. FINISH	B	1	2	3	U
PLASTER/DW	☐	■	■	☐	☐
PANELING	☐	☐	☐	☐	☐
UNFINISHED	■	☐	☐	☐	☐

ACCOMMODATIONS					
# OF ROOMS		5	2		
BEDROOMS		2	1		
FIREPLACES					

HEAT & AC	B	1	2	3	U
NO HEAT	☐	☐	☐	☐	☐
CTRL HEAT	☐	■	■	☐	☐
HW/STEAM	☐	☐	☐	☐	☐
ELECTRIC	☐	☐	☐	☐	☐
HEAT PUMP	☐	☐	☐	☐	☐
FLR/WALL	☐	☐	☐	☐	☐
STVE/SPCE	☐	☐	☐	☐	☐
GEOTHERMAL	☐	☐	☐	☐	☐
OUTSIDE	☐	☐	☐	☐	☐
CTRL A/C	☐	■	■	☐	☐

PLUMBING					BASE ■
X FULL BATH		1			
X HALF BATH					
X FIXTURES					

FLOOR	AREA	CONST	VALUE
1	1284	FR	186,800
.25	321	FR	42,590
+	0	FR	7,540
BSMT	1284		18,360
SUBTOTAL			255,290
MULTI-FAMILY #	0		0
BUILDING TYPE	100%		0
BSMT FINISH	0 S.F.		0
FIREPLACE #	0		0
HEATING	0 S.F.		0
AIR COND	1,605 S.F.		2,650
PLUMBING #	3		3,630
GARAGES & CARPORTS			14,200
EXTRA FEATURES			6,300
SUBTOTAL			282,070
GRADE FACTOR			105 %
UNADJUSTED VALUE			296,170
FACTOR			100 %

SKETCH

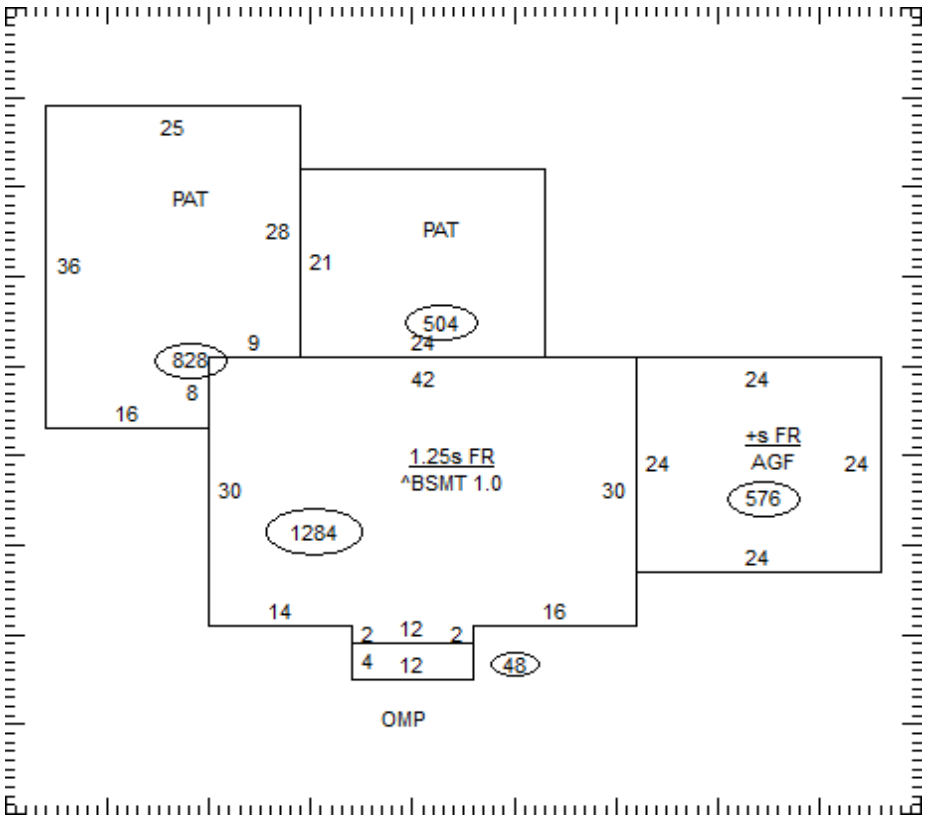

OCCUPANCY	ST.HT	SIZE	AREA	GRADE	PRICE	AGE	REMD	CND	UNADJ VAL	PHYS	PHYS VAL	FUNC	TRUE VAL
DWELLING	1.25	SK	1,605	C+		2001		G	296,170	19	239,900		239,900
1													
2													
3													
4													
5													
6													
7													
8													
9													
10													
11													
											TOTAL		239,900

17-010120.0205

COMMENTS

trim 42x8 L/F Brick
Dwelling has an Economic Factor of 100%