17-000200.0500

GIBSON TWP-FT RECOVERY CORP / FT RECOVERY SD
13-09-476-011

Property Class: 510
Neighborhood 001705-TS40
Map: 04
Block:
Card: 10
Bk: Pg:

GUGGENBILLER CHAD S & ANNE E
GUGGENBILLER CHAD S & ANNE E
706 FAIRLANE DR
FORT RECOVERY, OH 45846

LEGAL INFORMATION
C & C SUBD

LOT#: 5

	OWNERSHIP	ADDRESS	CITY	STATE	ZIP	DATE	AMOUNT	DEED:CONV#	JS	VALID
1	GUGGENBILLER CHAD S &	706 FAIRLANE DR	FORT RECOVERY	OH	45846	03/16/2018	399,000	WDC : 144	☐	■
2	MUHLENKAMP CYRIL L &	706 FAIRLANE DR	FT RECOVERY	OH	45846		0	: 0	☐	☐
3							0	0	☐	☐

X: ☐ TTO LISTER: NS DATE: 09/14/2004 TIME: 03:46:50 PM ☐ LETTER ☐ LETTER REC'D GIS CODE

STREET/ROAD	TOPOGRAPHY	PU-UTILITIES-PR	NEIGHBORHOOD	INFLUENCE FACTORS	
■ PAVED	■ LEVEL	☐ WATER ☐	■ IMPROVING	☐ A. NO ROAD	☐ F. RESTRICT
☐ GRAVEL	☐ HIGH	☐ SEWER ☐	☐ STATIC	☐ B. TOPGRHY	☐ G. WOOD LT
☐ DIRT	☐ LOW	☐ GAS ☐	☐ DECLINING	☐ C. Ex Front	☐ H. VACANCY
☐ SIDEWALKS	☐ ROLLING	☐ ELECTRIC ☐	☐ OLD	☐ D. QUANTITY	☐ I. WATER FRONT
☐ CURBS	☐ STANDARD	■ STANDARD	☐ STANDARD	☐ E. SZ/SHAPE	☐ J. OTHER/CDU

PROPERTY LOCATION
706 FAIRLANE DR, FT RECOVERY

COMMENT
TY2022:Net Gen=$4,185.68, Other Assessment=$0.44
DE16 DESKTOP REVIEW CHANGE- correct sketch
DE19 RMV HOMESTEAD CREDIT
DE22 CHG PAT TO WDDK; DESKTOP RVW

LAND COMPUTATIONS

LAND TYPE	SIZE	M RATE C	INF	M VALUE C
F:Front	F156 D146	ST350 DP98 ADJ343		53,500 0
			TOTAL	53,500 0

VALUATION SUMMARY

VALUE YEAR		2023	2022	2020	2017				
REASON FOR CHANGE		RAPP	MISC	RAPP	RAPP				
APPRAISED VALUE	LAND	53,500	33,100	33,100	26,800				
	IMPR	421,000	282,700	281,400	270,200				
	TOTAL	474,500	315,800	314,500	297,000				
ASSESSED VALUE	LAND	18,730	11,590	11,590	9,380				
	IMPR	147,350	98,950	98,490	94,570				
	TOTAL	166,080	110,540	110,080	103,950				

OCCUPANCY	EXTERIOR
■ SF ☐ DU ☐ TR	■ WOOD
☐ CONVERSION	☐ STUCCO
BUILDING TYPE	☐ ALM/VYNL
☐ MOBILE HOME	☐ CONC BLK
☐ BI/TR LEVEL	☐ METAL
☐ MOD/MAN	■ BRICK
☐ _____	☐ STONE

ROOFING	ROOF TYPE
☐ METAL	☐ GABLE
☐ SLT/TLE	■ HIP
■ SHINGLES	☐ GAMBREL
☐ SHAKES	☐ MANSARD
☐ COMPOSITE	☐ FLAT

FLOORS	B	1	2	3	U
CONCRETE	■	☐	☐	☐	☐
WOOD	☐	☐	☐	☐	☐
TILE/COMPO	■	■	■	☐	☐
CARPET	■	■	■	■	☐

INT. FINISH	B	1	2	3	U
PLASTER/DW	■	■	■	■	☐
PANELING	☐	☐	☐	☐	☐
UNFINISHED	☐	☐	☐	☐	☐

ACCOMMODATIONS					
# OF ROOMS	2		6	2	
BEDROOMS			1	2	
FIREPLACES			1		

HEAT & AC	B	1	2	3	U
NO HEAT	☐	☐	☐	☐	☐
CTRL HEAT	■	■	■	■	☐
HW/STEAM	☐	☐	☐	☐	☐
ELECTRIC	☐	☐	☐	☐	☐
HEAT PUMP	☐	☐	☐	☐	☐
FLR/WALL	☐	☐	☐	☐	☐
STVE/SPCE	☐	☐	☐	☐	☐
GEOTHERMAL	☐	☐	☐	☐	☐
OUTSIDE	☐	☐	☐	☐	☐
CTRL A/C	■	■	■	■	☐

PLUMBING			BASE ■		
X FULL BATH				1	
X HALF BATH	1		1		
X FIXTURES	1				

FLOOR	AREA	CONST	VALUE
1	284	FR	33,530
1	1699	BRK	214,670
2ND	946	FR	53,620
BSMT	1935		27,670

SUBTOTAL		329,490
MULTI-FAMILY #	0	0
BUILDING TYPE	100%	0
BSMT FINISH	493 S.F.	7,050
FIREPLACE #	1	4,400
HEATING	0 S.F.	0
AIR COND	3,422 S.F.	5,640
PLUMBING #	8	9,680
GARAGES & CARPORTS		19,600
EXTRA FEATURES		23,900
SUBTOTAL		399,760
GRADE FACTOR		130 %
UNADJUSTED VALUE		519,690
FACTOR		100 %

SKETCH

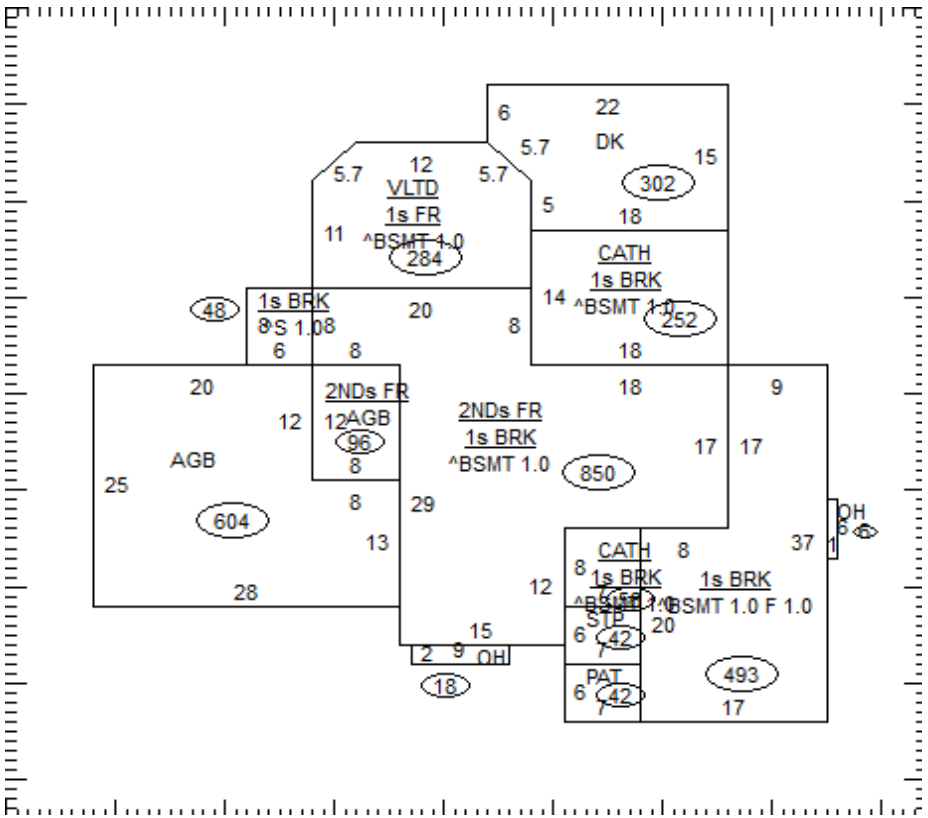

OCCUPANCY	ST.HT	SIZE	AREA	GRADE	PRICE	AGE	REMD	CND	UNADJ VAL	PHYS	PHYS VAL	FUNC	TRUE VAL
DWELLING	2	SK	2,929	B+		1999		A	519,690	19	420,950		421,000
1													
2													
3													
4													
5													
6													
7													
8													
9													
10													
11													
											TOTAL		421,000

17-000200.0500

COMMENTS

IRREGULAR LOT SIZE
Dwelling has an Economic Factor of 100%