16-023100.0100

GIBSON TWP / FT RECOVERY SD

13-23-400-003

Property Class: 510

Neighborhood 009165-R150

Map: 08
Block:
Card: 08
Bk: Pg:

LINK GUSTAVE C & TESSA R
LINK GUSTAVE C & TESSA R
1909 SHARPSBURG RD
FORT RECOVERY, OH 45846

LEGAL INFORMATION
PT SE SE

RTS: 001-15-23
Acres:4.4440

	OWNERSHIP	ADDRESS	CITY	STATE	ZIP	DATE	AMOUNT	DEED:CONV#	JS	VALID
1	LINK GUSTAVE C & TESSA R	1909 SHARPSBURG RD	FORT RECOVERY	OH	45846	03/05/2018	315,000	WDC : 109	☐	■
2	SCHMITZ DANIEL L & MARILYN	1909 SHARPSBURG RD	FT RECOVERY	OH	45846		0	: 0	☐	☐
3							0	0	☐	☐

X: ☐ TTO LISTER: NS DATE: 10/13/2004 TIME: 01:14:52 PM ■ LETTER ☐ LETTER REC'D GIS CODE

STREET/ROAD	TOPOGRAPHY	PU-UTILITIES-PR	NEIGHBORHOOD	INFLUENCE FACTORS	
■ PAVED	■ LEVEL	☐ WATER ☐	☐ IMPROVING	☐ A. NO ROAD	☐ F. RESTRICT
☐ GRAVEL	☐ HIGH	☐ SEWER ☐	■ STATIC	☐ B. TOPGRHY	☐ G. WOOD LT
☐ DIRT	☐ LOW	☐ GAS ☐	☐ DECLINING	☐ C. Ex Front	☐ H. VACANCY
☐ SIDEWALKS	☐ ROLLING	☐ ELECTRIC ☐	☐ OLD	☐ D. QUANTITY	☐ I. WATER FRONT
☐ CURBS	☐ STANDARD	■ STANDARD	☐ STANDARD	☐ E. SZ/SHAPE	☐ J. OTHER/CDU

PROPERTY LOCATION
1909 SHARPSBURG RD, FT RECOVERY

COMMENT
TY2022:Net Gen=$2,356.34, Other Assessment=$0.72
DE09 PER DATA MAILER CORRECTED PLMG
DE17 DESKTOP RVW CHG:ADD PAT, BW, ENCLOSE OMP

LAND COMPUTATIONS

LAND TYPE	SIZE	M RATE C	INF	M VALUE C
HS:Home Site	AC:1	26880		26,900 0
SM:Small Acreage	AC:3.444	7900		27,200 0
Total Acres: 4.4440			TOTAL	54,100 0

VALUATION SUMMARY

VALUE YEAR		2023	2020	2017	2017				
REASON FOR CHANGE		RAPP	RAPP	RAPP	MISC				
APPRAISED VALUE	LAND	54,100	43,500	38,500	39,300				
	IMPR	238,300	171,400	111,000	107,600				
	TOTAL	292,400	214,900	149,500	146,900				
ASSESSED VALUE	LAND	18,940	15,230	13,480	13,760				
	IMPR	83,410	59,990	38,850	37,660				
	TOTAL	102,350	75,220	52,330	51,420				

OCCUPANCY	EXTERIOR
■ SF ☐ DU ☐ TR	☐ WOOD
☐ CONVERSION	☐ STUCCO
BUILDING TYPE	■ ALM/VYNL
☐ MOBILE HOME	☐ CONC BLK
☐ BI/TR LEVEL	☐ METAL
☐ MOD/MAN	☐ BRICK
☐ _____	☐ STONE

ROOFING	ROOF TYPE
■ METAL	■ GABLE
☐ SLT/TLE	☐ HIP
☐ SHINGLES	☐ GAMBREL
☐ SHAKES	☐ MANSARD
☐ COMPOSITE	☐ FLAT

FLOORS	B	1	2	3	U
CONCRETE	☐	☐	☐	☐	☐
WOOD	☐	☐	☐	☐	☐
TILE/COMPO	☐	■	☐	☐	☐
CARPET	☐	■	■	☐	☐

INT. FINISH	B	1	2	3	U
PLASTER/DW	☐	■	■	☐	☐
PANELING	☐	■	☐	☐	☐
UNFINISHED	☐	☐	☐	☐	☐

ACCOMMODATIONS					
# OF ROOMS		4	3		
BEDROOMS		3			
FIREPLACES					

HEAT & AC	B	1	2	3	U
NO HEAT	☐	☐	☐	☐	☐
CTRL HEAT	☐	■	■	☐	☐
HW/STEAM	☐	☐	☐	☐	☐
ELECTRIC	☐	☐	☐	☐	☐
HEAT PUMP	☐	☐	☐	☐	☐
FLR/WALL	☐	☐	☐	☐	☐
STVE/SPCE	☐	☐	☐	☐	☐
GEOTHERMAL	☐	☐	☐	☐	☐
OUTSIDE	☐	☐	☐	☐	☐
CTRL A/C	☐	■	■	☐	☐

PLUMBING	BASE ■			
X FULL BATH		1		
X HALF BATH				
X FIXTURES		1		

FLOOR	AREA	CONST	VALUE
1	1736	FR	218,280
.5	300	FR	23,390
BSMT	700		10,010
SUBTOTAL			251,680
MULTI-FAMILY #	0		0
BUILDING TYPE	100%		0
BSMT FINISH	0	S.F.	0
FIREPLACE #	0		0
HEATING	0	S.F.	0
AIR COND	2,036	S.F.	3,360
PLUMBING #	4		4,840
GARAGES & CARPORTS			20,100
EXTRA FEATURES			12,800
SUBTOTAL			292,780
GRADE FACTOR			105 %
UNADJUSTED VALUE			307,420
FACTOR			100 %

SKETCH

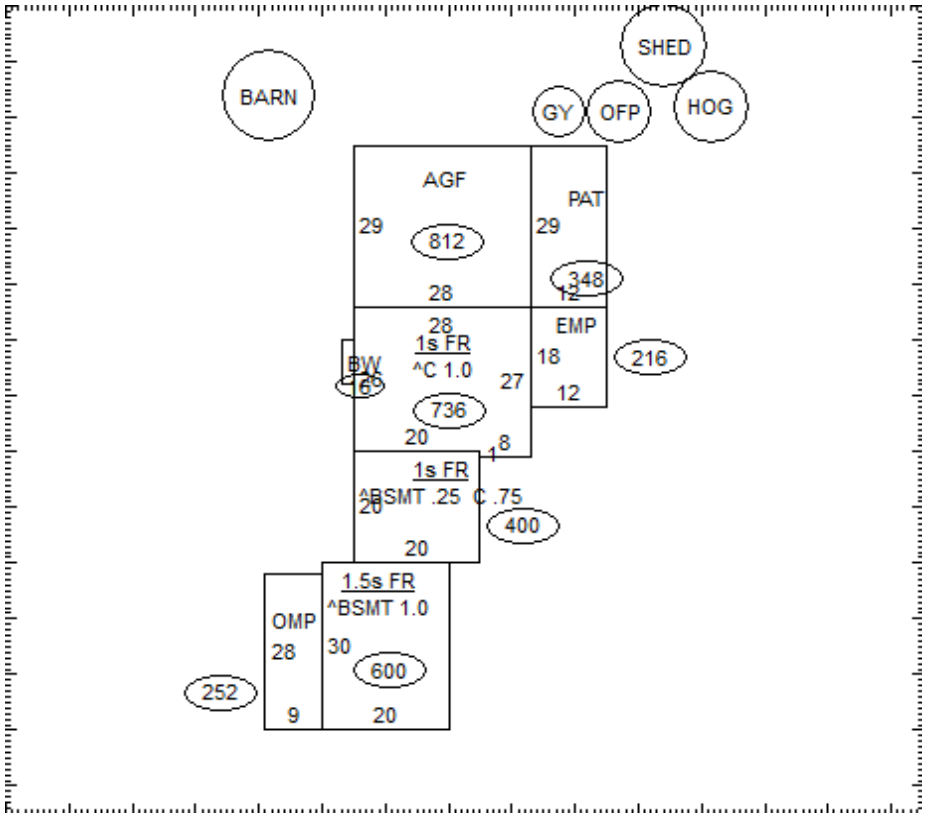

OCCUPANCY	ST.HT	SIZE	AREA	GRADE	PRICE	AGE	REMD	CND	UNADJ VAL	PHYS	PHYS VAL	FUNC	TRUE VAL
DWELLING	1.5	SK	2,036	C+		1900	1996	A	307,420	30	215,190		236,700
1 OFP	8	12x20	240	D	12.83	1980		A	3,080	78	680		700
2 Barn	14	36x60	2,160	C	12.00	1920		A	25,920	95	1,300	DFLT50	700
3 Granary	12	20x22	440	D	6.16	1920		F	2,710	95	140	DFLT50	100
4 Hog Hse	8	17x25	425	D	10.80	1920		A	4,590	95	230	DFLT50	100
5 Shed		10x12	120	C		1990		F		58			0
6													
7													
8													
9													
10													
11													
											TOTAL		238,300

16-023100.0100

COMMENTS

48 L/F 8' HI BRK 120 L/F 4' HI BRK
Dwelling has an Economic Factor of 110% (Rollback Basis=$263,600)