11-002500.0400

FRANKLIN TWP / MARION SD

12-02-400-012

Property Class: 510

Neighborhood 009115-R150

Map:
Block:
Card:
Bk: Pg:

SCHWIETERMAN ERIC R & JILL B
SCHWIETERMAN ERIC R & JILL B
3699 ST JOHNS RD
CELINA, OH 45822
Created in 2019 From 11-002500.0000 due to Split

LEGAL INFORMATION
PT NE SE

RTS: 003-07-02
Acres:3.7840

	OWNERSHIP	ADDRESS	CITY	STATE	ZIP	DATE	AMOUNT	DEED:CONV#	JS	VALID
1	SCHWIETERMAN ERIC R &	3699 ST JOHNS RD	CELINA	OH	45822	03/14/2019	68,200	WDC : 154	☐	■
2							0	0	☐	☐
3							0	0	☐	☐

X: ☐ TTO LISTER: HK DATE: 03/04/2021 TIME: 12:00:00 AM ☐ LETTER ☐ LETTER REC'D GIS CODE

STREET/ROAD	TOPOGRAPHY	PU-UTILITIES-PR	NEIGHBORHOOD	INFLUENCE FACTORS	
☐ PAVED	☐ LEVEL	☐ WATER ☐	☐ IMPROVING	☐ A. NO ROAD	☐ F. RESTRICT
☐ GRAVEL	☐ HIGH	☐ SEWER ☐	☐ STATIC	☐ B. TOPGRHY	☐ G. WOOD LT
☐ DIRT	☐ LOW	☐ GAS ☐	☐ DECLINING	☐ C. Ex Front	☐ H. VACANCY
☐ SIDEWALKS	☐ ROLLING	☐ ELECTRIC ☐	☐ OLD	☐ D. QUANTITY	☐ I. WATER FRONT
☐ CURBS	☐ STANDARD	☐ STANDARD	☐ STANDARD	☐ E. SZ/SHAPE	☐ J. OTHER/CDU

PROPERTY LOCATION
3699 ST JOHNS RD

COMMENT
TY2022:Net Gen=$4,590.48, Other Assessment=$0.00
DE19 TTO - DWLG & SEV'L OUTBLDGS DEMO'D; ALLOW FNC
DE20 RMV OLD BARN & DWLG
DE20 ADD NEW DWLG AT 90% COMPL
DE21 RMV INC, DEMO OUTBLDGS

LAND COMPUTATIONS

LAND TYPE	SIZE	M RATE C	INF	M VALUE C
HS:Home Site	AC:1	30320		30,300 0
SM:Small Acreage	AC:2.784	8100		22,600 0
Total Acres: 3.7840			TOTAL	52,900 0

VALUATION SUMMARY

VALUE YEAR		2023	2021	2020	2020	2019	2019	2019
REASON FOR CHANGE		RAPP	NC	RAPP	NC	REMB	MISC	RCLS
APPRAISED VALUE	LAND	52,900	36,600	36,600	34,900	34,900	34,900	16,500
	IMPR	406,700	299,200	271,200	246,500	13,500	36,200	36,200
	TOTAL	459,600	335,800	307,800	281,400	48,400	71,100	52,700
ASSESSED VALUE	LAND	18,520	12,810	12,810	12,220	12,220	12,220	5,780
	IMPR	142,350	104,720	94,920	86,280	4,730	12,670	12,670
	TOTAL	160,870	117,530	107,730	98,500	16,950	24,890	18,450

OCCUPANCY	EXTERIOR
■ SF ☐ DU ☐ TR	☐ WOOD
☐ CONVERSION	☐ STUCCO
BUILDING TYPE	■ ALM/VYNL
☐ MOBILE HOME	☐ CONC BLK
☐ BI/TR LEVEL	☐ METAL
☐ MOD/MAN	☐ BRICK
☐ _____	■ STONE

ROOFING	ROOF TYPE
☐ METAL	☐ GABLE
☐ SLT/TLE	■ HIP
■ SHINGLES	☐ GAMBREL
☐ SHAKES	☐ MANSARD
☐ COMPOSITE	☐ FLAT

FLOORS	B	1	2	3	U
CONCRETE	☐	☐	☐	☐	☐
WOOD	☐	☐	☐	☐	☐
TILE/COMPO	☐	■	☐	☐	☐
CARPET	☐	■	☐	☐	☐

INT. FINISH	B	1	2	3	U
PLASTER/DW	☐	■	☐	☐	☐
PANELING	☐	☐	☐	☐	☐
UNFINISHED	■	☐	☐	☐	☐

ACCOMMODATIONS					
# OF ROOMS		9			
BEDROOMS		3			
FIREPLACES					

HEAT & AC	B	1	2	3	U
NO HEAT	☐	☐	☐	☐	☐
CTRL HEAT	☐	■	☐	☐	☐
HW/STEAM	☐	☐	☐	☐	☐
ELECTRIC	☐	☐	☐	☐	☐
HEAT PUMP	☐	☐	☐	☐	☐
FLR/WALL	☐	☐	☐	☐	☐
STVE/SPCE	☐	☐	☐	☐	☐
GEOTHERMAL	☐	■	☐	☐	☐
OUTSIDE	☐	☐	☐	☐	☐
CTRL A/C	☐	■	☐	☐	☐

PLUMBING	BASE ■			
X FULL BATH		1		
X HALF BATH		1		
X FIXTURES				

FLOOR	AREA	CONST	VALUE
1	2992	FR	312,250
BSMT	2992		42,790
SUBTOTAL			355,040
MULTI-FAMILY #	0		0
BUILDING TYPE	100%		0
BSMT FINISH	0 S.F.		0
FIREPLACE #	0		0
HEATING	0 S.F.		0
AIR COND	2,992 S.F.		4,940
PLUMBING #	5		6,050
GARAGES & CARPORTS			23,000
EXTRA FEATURES			10,300
SUBTOTAL			399,330
GRADE FACTOR			105 %
UNADJUSTED VALUE			419,300
FACTOR			100 %

SKETCH

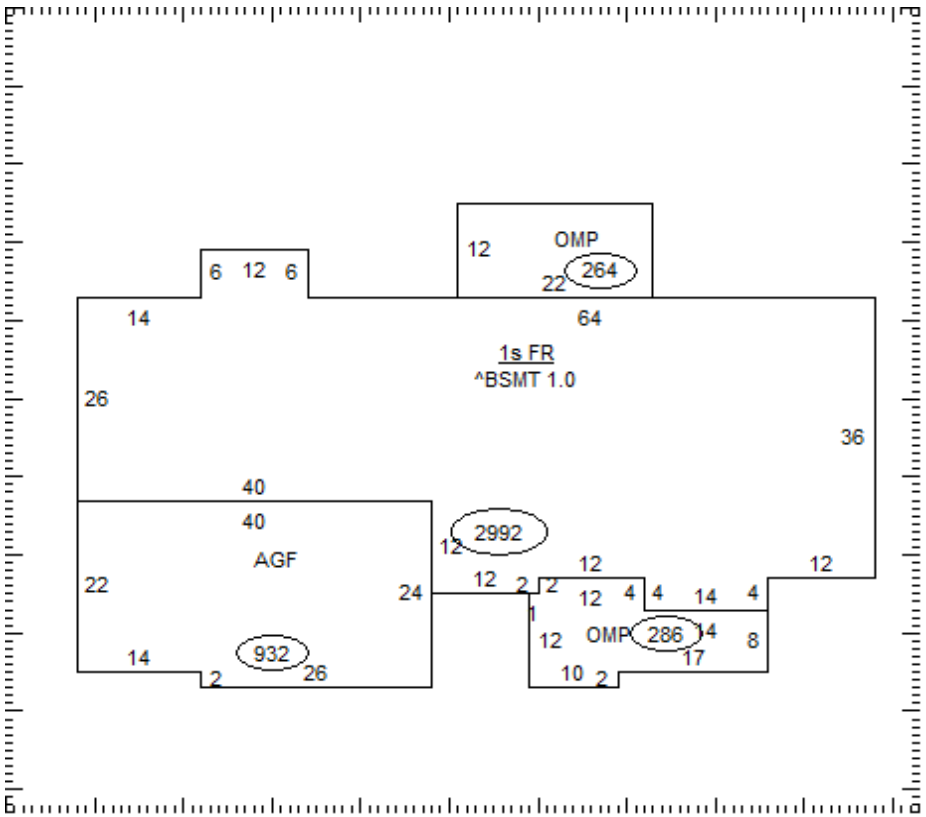

OCCUPANCY	ST.HT	SIZE	AREA	GRADE	PRICE	AGE	REMD	CND	UNADJ VAL	PHYS	PHYS VAL	FUNC	TRUE VAL
DWELLING	1	SK	2,992	C+		2019		G	419,300	3	406,720		406,700
1													
2													
3													
4													
5													
6													
7													
8													
9													
10													
11													
											TOTAL		406,700

11-002500.0400

COMMENTS

Dwelling has an Economic Factor of 100% (Rollback Basis=$437,000)