09-109900.0100

SCHWARTZ JAMES E & DANA L
SCHWARTZ JAMES E & DANA L
5336 BEHM RD
CELINA, OH 45822

FRANKLIN TWP / CELINA SD

09-24-151-001

LEGAL INFORMATION
PT NW SW NW

RTS: 003-06-24
Acres:1.3790

Property Class: 560
Neighborhood 095LA50-LA50
Map: 01A
Block:
Card: 31
Bk: Pg:

	OWNERSHIP	ADDRESS	CITY	STATE	ZIP	DATE	AMOUNT	DEED:CONV#	JS	VALID
1	SCHWARTZ JAMES E & DANA	5336 BEHM RD	CELINA	OH	45822	02/03/2017	35,000	WDC : 75	☐	■
2	MERCER DEVELOPMENT LP	8022 ST RTE 119	MARIA STEIN	OH	45860	10/01/2013	30,000	WDC : 658	☐	■
3	MURPHY BARBARA	2730 ROSEWOOD DR	TROY	OH	45373	03/21/2012	0	AFE : X : 0	☐	☐

X: ☐ TTO LISTER: DATE: 03/15/2023 TIME: 12:00:00 AM ☐ LETTER ☐ LETTER REC'D GIS CODE

STREET/ROAD	TOPOGRAPHY	PU-UTILITIES-PR	NEIGHBORHOOD	INFLUENCE FACTORS	
■ PAVED	■ LEVEL	☐ WATER ☐	☐ IMPROVING	☐ A. NO ROAD	☐ F. RESTRICT
☐ GRAVEL	☐ HIGH	☐ SEWER ☐	■ STATIC	☐ B. TOPGRHY	☐ G. WOOD LT
☐ DIRT	☐ LOW	☐ GAS ☐	☐ DECLINING	☐ C. Ex Front	☐ H. VACANCY
☐ SIDEWALKS	☐ ROLLING	☐ ELECTRIC ☐	☐ OLD	☐ D. QUANTITY	☐ I. WATER FRONT
☐ CURBS	☐ STANDARD	■ STANDARD	☐ STANDARD	☐ E. SZ/SHAPE	☐ J. OTHER/CDU

PROPERTY LOCATION
5336 BEHM RD, CELINA

COMMENT
TY2022:Net Gen=$3,498.04, Other Assessment=$0.00
DE17 DESKTOP RVW CHG:MOVE WDDK TO MH CARD
DE17 RMV SHEDS & MH PER OWNER
DE23 ADD FULL BATH, RMV HALF BATH, ADD OFP; DESKTOP RVW

LAND COMPUTATIONS

LAND TYPE	SIZE	M RATE C	INF	M VALUE C
HS:Home Site	AC:1	23780		23,800 0
SM:Small Acreage	AC:0.379	8500		3,200 0
Total Acres: 1.3790			TOTAL	27,000 0

VALUATION SUMMARY

		2023	2020	2020	2019	2017	2017		
VALUE YEAR		2023	2020	2020	2019	2017	2017		
REASON FOR CHANGE		RAPP	RAPP	NC	NC	RAPP	MISC		
APPRAISED VALUE	LAND	27,000	20,900	19,200	19,200	19,200	17,700		
	IMPR	282,100	191,200	167,100	19,500	3,800	4,100		
	TOTAL	309,100	212,100	186,300	38,700	23,000	21,800		
ASSESSED VALUE	LAND	9,450	7,320	6,720	6,720	6,720	6,200		
	IMPR	98,740	66,920	58,490	6,830	1,330	1,440		
	TOTAL	108,190	74,240	65,210	13,550	8,050	7,640		

OCCUPANCY	EXTERIOR
■ SF ☐ DU ☐ TR	☐ WOOD
☐ CONVERSION	☐ STUCCO
BUILDING TYPE	■ ALM/VYNL
☐ MOBILE HOME	☐ CONC BLK
☐ BI/TR LEVEL	☐ METAL
☐ MOD/MAN	☐ BRICK
☐ _____	■ STONE

ROOFING	ROOF TYPE
☐ METAL	■ GABLE
☐ SLT/TLE	☐ HIP
■ SHINGLES	☐ GAMBREL
☐ SHAKES	☐ MANSARD
☐ COMPOSITE	☐ FLAT

FLOORS	B	1	2	3	U
CONCRETE	☐	☐	☐	☐	☐
WOOD	☐	☐	☐	☐	☐
TILE/COMPO	☐	■	☐	☐	☐
CARPET	☐	■	☐	☐	☐

INT. FINISH	B	1	2	3	U
PLASTER/DW	☐	■	☐	☐	☐
PANELING	☐	☐	☐	☐	☐
UNFINISHED	☐	☐	☐	☐	☐

ACCOMMODATIONS					
# OF ROOMS		6			
BEDROOMS		3			
FIREPLACES		1			

HEAT & AC	B	1	2	3	U
NO HEAT	☐	☐	☐	☐	☐
CTRL HEAT	☐	■	☐	☐	☐
HW/STEAM	☐	☐	☐	☐	☐
ELECTRIC	☐	☐	☐	☐	☐
HEAT PUMP	☐	☐	☐	☐	☐
FLR/WALL	☐	☐	☐	☐	☐
STVE/SPCE	☐	☐	☐	☐	☐
GEOTHERMAL	☐	☐	☐	☐	☐
OUTSIDE	☐	☐	☐	☐	☐
CTRL A/C	☐	■	☐	☐	☐

PLUMBING	BASE ■				
X FULL BATH		1			
X HALF BATH					
X FIXTURES					

FLOOR	AREA	CONST	VALUE
1	1960	FR	231,440

SUBTOTAL		231,440
MULTI-FAMILY #	0	0
BUILDING TYPE	100%	0
BSMT FINISH	0 S.F.	0
FIREPLACE #	1	4,400
HEATING	0 S.F.	0
AIR COND	1,960 S.F.	3,230
PLUMBING #	3	3,630
GARAGES & CARPORTS		14,200
EXTRA FEATURES		7,300
SUBTOTAL		264,200
GRADE FACTOR		105 %
UNADJUSTED VALUE		277,410
FACTOR		100 %

SKETCH

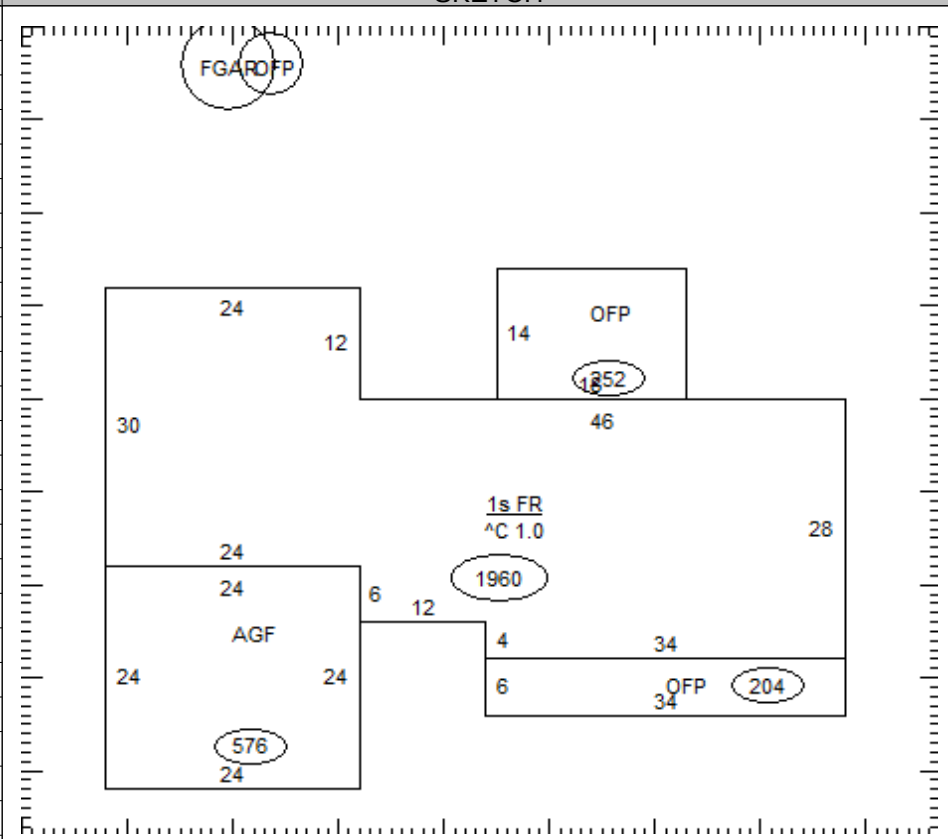

OCCUPANCY	ST.HT	SIZE	AREA	GRADE	PRICE	AGE	REMD	CND	UNADJ VAL	PHYS	PHYS VAL	FUNC	TRUE VAL
MMH/RE Dwelling	1	SK	1,960	C+		2019		G	277,410	3	269,090		255,600
1 Gar - Frame	8	24x40	960	C	23.70	2018		A	22,750	5	21,610		21,600
2 OFP		8x40	320	C	16.04	2018		A	5,130	5	4,870		4,900
3													
4													
5													
6													
7													
8													
9													
10													
11													
											TOTAL		282,100

09-109900.0100

COMMENTS

#9-1211 '73 STERLING; OWNER MURPHY
Dwelling has an Economic Factor of 95% (Rollback Basis=$279,400)

09-109900.0100

SCHWARTZ JAMES E & DANA L
SCHWARTZ JAMES E & DANA L
5336 BEHM RD
CELINA, OH 45822

FRANKLIN TWP / CELINA SD

09-24-151-001

LEGAL INFORMATION
PT NW SW NW

RTS: 003-06-24
Acres:1.3790

Property Class: 560
Neighborhood 095LA50-LA50
Map: 01A
Block:
Card: 31
Bk: Pg:

	OWNERSHIP	ADDRESS	CITY	STATE	ZIP	DATE	AMOUNT	DEED:CONV#	JS	VALID
1	MURPHY RICHARD A &	5336 BEHM RD	CELINA	OH	45822	08/04/1993	41,300	: A : 0	☐	■
2							0	0	☐	☐
3							0	0	☐	☐

X: ☐ TTO LISTER: DATE: 03/15/2023 TIME: 12:00:00 AM ☐ LETTER ☐ LETTER REC'D GIS CODE

STREET/ROAD	TOPOGRAPHY	PU-UTILITIES-PR	NEIGHBORHOOD	INFLUENCE FACTORS	
■ PAVED	■ LEVEL	☐ WATER ☐	☐ IMPROVING	☐ A. NO ROAD	☐ F. RESTRICT
☐ GRAVEL	☐ HIGH	☐ SEWER ☐	■ STATIC	☐ B. TOPGRHY	☐ G. WOOD LT
☐ DIRT	☐ LOW	☐ GAS ☐	☐ DECLINING	☐ C. Ex Front	☐ H. VACANCY
☐ SIDEWALKS	☐ ROLLING	☐ ELECTRIC ☐	☐ OLD	☐ D. QUANTITY	☐ I. WATER FRONT
☐ CURBS	☐ STANDARD	■ STANDARD	☐ STANDARD	☐ E. SZ/SHAPE	☐ J. OTHER/CDU

PROPERTY LOCATION
5336 BEHM RD, CELINA

COMMENT

LAND COMPUTATIONS

LAND TYPE	SIZE	M RATE C	INF	M VALUE C
Total Acres: 1.3790			TOTAL	27,000 0

VALUATION SUMMARY

VALUE YEAR									
REASON FOR CHANGE									
APPRAISED VALUE	LAND								
	IMPR								
	TOTAL								
ASSESSED VALUE	LAND								
	IMPR								
	TOTAL								

OCCUPANCY	EXTERIOR
☐SF ☐DU ☐TR	☐ WOOD
☐CONVERSION	☐ STUCCO
BUILDING TYPE	☐ ALM/VYNL
☐ MOBILE HOME	☐ CONC BLK
☐ BI/TR LEVEL	☐ METAL
☐ MOD/MAN	☐ BRICK
☐ _____	☐ STONE

ROOFING	ROOF TYPE
☐ METAL	☐ GABLE
☐ SLT/TLE	☐ HIP
☐ SHINGLES	☐ GAMBREL
☐ SHAKES	☐ MANSARD
☐ COMPOSITE	☐ FLAT

FLOORS	B	1	2	3	U
CONCRETE	☐	☐	☐	☐	☐
WOOD	☐	☐	☐	☐	☐
TILE/COMPO	☐	☐	☐	☐	☐
CARPET	☐	☐	☐	☐	☐

INT. FINISH	B	1	2	3	U
PLASTER/DW	☐	☐	☐	☐	☐
PANELING	☐	☐	☐	☐	☐
UNFINISHED	☐	☐	☐	☐	☐

ACCOMMODATIONS					
# OF ROOMS					
BEDROOMS					
FIREPLACES					

HEAT & AC	B	1	2	3	U
NO HEAT	☐	☐	☐	☐	☐
CTRL HEAT	☐	☐	☐	☐	☐
HW/STEAM	☐	☐	☐	☐	☐
ELECTRIC	☐	☐	☐	☐	☐
HEAT PUMP	☐	☐	☐	☐	☐
FLR/WALL	☐	☐	☐	☐	☐
STVE/SPCE	☐	☐	☐	☐	☐
GEOTHERMAL	☐	☐	☐	☐	☐
OUTSIDE	☐	☐	☐	☐	☐
CTRL A/C	☐	☐	☐	☐	☐

PLUMBING	BASE ☐				
X FULL BATH					
X HALF BATH					
X FIXTURES					

FLOOR	AREA	CONST	VALUE

SUBTOTAL		0
MULTI-FAMILY #	0	0
BUILDING TYPE	000%	0
BSMT FINISH	0 S.F.	0
FIREPLACE #	0	0
HEATING	0 S.F.	0
AIR COND	0 S.F.	0
PLUMBING #	0	0
GARAGES & CARPORTS		0
EXTRA FEATURES		0
SUBTOTAL		0
GRADE FACTOR		%
UNADJUSTED VALUE		0
FACTOR		%

SKETCH

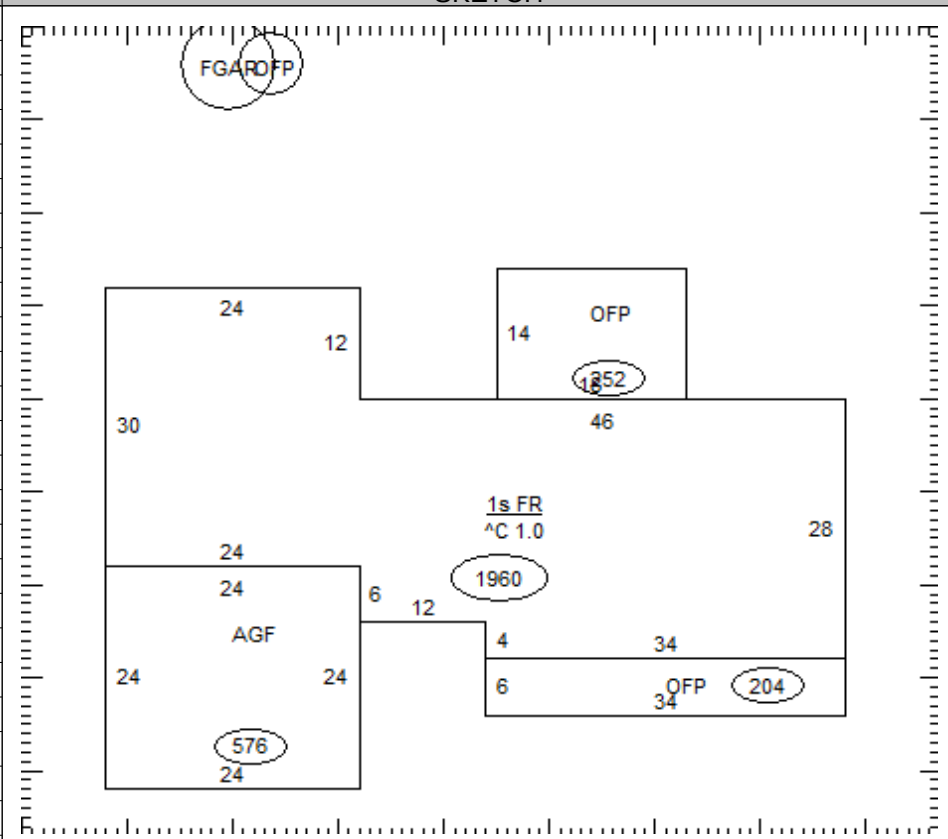

OCCUPANCY	ST.HT	SIZE	AREA	GRADE	PRICE	AGE	REMD	CND	UNADJ VAL	PHYS	PHYS VAL	FUNC	TRUE VAL
MMH/RE Dwelling		SK											
1													
2													
3													
4													
5													
6													
7													
8													
9													
10													
11													
												TOTAL	0

09-109900.0100

COMMENTS