09-108400.0304

FRANKLIN TWP / CELINA SD

09-24-102-014

Property Class: 510

Neighborhood 095CL80-CL80

Map: 01A
Block:
Card: 22
Bk: Pg:

DEXTER GEORGE J ETAL
DEXTER GEORGE J ETAL
5404 ROBERT RD
CELINA, OH 45822
Created in 2003 From - . 0 due to Split

LEGAL INFORMATION
GRIMM SUBD
PLATTED 2/26/01
RTS: 003-06-24 LOT#: 4

	OWNERSHIP	ADDRESS	CITY	STATE	ZIP	DATE	AMOUNT	DEED:CONV#	JS	VALID
1	DEXTER GEORGE J ETAL	5404 ROBERT RD	CELINA	OH	45822	12/04/2020	62,000	SUC : 907	■	■
2	BURGER RICHARD U JU &	84 LOOP RD	WEST MANCHESTER	OH	45382	07/27/2006	54,900	WDC : A : 608	☐	☐
3	GRIMM ROBERT H &	5438 ROBERT RD	CELINA	OH	45822	11/01/2001	0	: X : 0	☐	☐

X: ☐ TTO LISTER: HK DATE: 03/21/2022 TIME: 12:00:00 AM ■ LETTER ■ LETTER REC'D GIS CODE

STREET/ROAD	TOPOGRAPHY	PU-UTILITIES-PR	NEIGHBORHOOD	INFLUENCE FACTORS	
■ PAVED	■ LEVEL	☐ WATER ☐	☐ IMPROVING	☐ A. NO ROAD	☐ F. RESTRICT
☐ GRAVEL	☐ HIGH	☐ SEWER ☐	■ STATIC	☐ B. TOPGRHY	☐ G. WOOD LT
☐ DIRT	☐ LOW	☐ GAS ☐	☐ DECLINING	☐ C. Ex Front	☐ H. VACANCY
☐ SIDEWALKS	☐ ROLLING	☐ ELECTRIC ☐	☐ OLD	☐ D. QUANTITY	☐ I. WATER FRONT
☐ CURBS	☐ STANDARD	■ STANDARD	☐ STANDARD	☐ E. SZ/SHAPE	☐ J. OTHER/CDU

PROPERTY LOCATION
5404 ROBERT RD, CELINA

COMMENT
TY2022:Net Gen=$4,682.42, Other Assessment=$0.00
DE22 NEW DWLG ($290,000)

LAND COMPUTATIONS

LAND TYPE	SIZE	M RATE C	INF	M VALUE C
F:Front	F111 D117	ST650 DP88 ADJ572		63,500 0
			TOTAL	63,500 0

VALUATION SUMMARY

VALUE YEAR		2023	2022	2022	2020	2017			
REASON FOR CHANGE		RAPP	RCLS	NC	RAPP	RAPP			
APPRAISED VALUE	LAND	63,500	48,800	48,800	36,600	33,000			
	IMPR	348,400	235,800	235,800	0	0			
	TOTAL	411,900	284,600	284,600	36,600	33,000			
ASSESSED VALUE	LAND	22,230	17,080	17,080	12,810	11,550			
	IMPR	121,940	82,530	82,530	0	0			
	TOTAL	144,170	99,610	99,610	12,810	11,550			

OCCUPANCY	EXTERIOR
■ SF ☐ DU ☐ TR	☐ WOOD
☐ CONVERSION	☐ STUCCO
BUILDING TYPE	■ ALM/VYNL
☐ MOBILE HOME	☐ CONC BLK
☐ BI/TR LEVEL	☐ METAL
☐ MOD/MAN	☐ BRICK
☐ _____	☐ STONE

ROOFING	ROOF TYPE
☐ METAL	■ GABLE
☐ SLT/TLE	☐ HIP
■ SHINGLES	☐ GAMBREL
☐ SHAKES	☐ MANSARD
☐ COMPOSITE	☐ FLAT

FLOORS	B	1	2	3	U
CONCRETE	☐	☐	☐	☐	☐
WOOD	☐	☐	☐	☐	☐
TILE/COMPO	☐	☐	■	☐	☐
CARPET	☐	■	☐	☐	☐

INT. FINISH	B	1	2	3	U
PLASTER/DW	☐	■	■	☐	☐
PANELING	☐	☐	☐	☐	☐
UNFINISHED	☐	☐	☐	☐	☐

ACCOMMODATIONS					
# OF ROOMS		5	3		
BEDROOMS		1	2		
FIREPLACES		1			

HEAT & AC	B	1	2	3	U
NO HEAT	☐	☐	☐	☐	☐
CTRL HEAT	☐	■	■	☐	☐
HW/STEAM	☐	☐	☐	☐	☐
ELECTRIC	☐	☐	☐	☐	☐
HEAT PUMP	☐	☐	☐	☐	☐
FLR/WALL	☐	☐	☐	☐	☐
STVE/SPCE	☐	☐	☐	☐	☐
GEOTHERMAL	☐	☐	☐	☐	☐
OUTSIDE	☐	☐	☐	☐	☐
CTRL A/C	☐	■	■	☐	☐

PLUMBING			BASE ■		
X FULL BATH			1		
X HALF BATH		1			
X FIXTURES					

FLOOR	AREA	CONST	VALUE
1	1512	FR	202,050
.5	756	FR	62,640

SUBTOTAL			264,690
MULTI-FAMILY #	0		0
BUILDING TYPE	100%		0
BSMT FINISH	0	S.F.	0
FIREPLACE #	1		4,400
HEATING	0	S.F.	0
AIR COND	2,268	S.F.	3,740
PLUMBING #	5		6,050
GARAGES & CARPORTS			20,200
EXTRA FEATURES			5,500
SUBTOTAL			304,580
GRADE FACTOR			120 %
UNADJUSTED VALUE			365,500
FACTOR			100 %

SKETCH

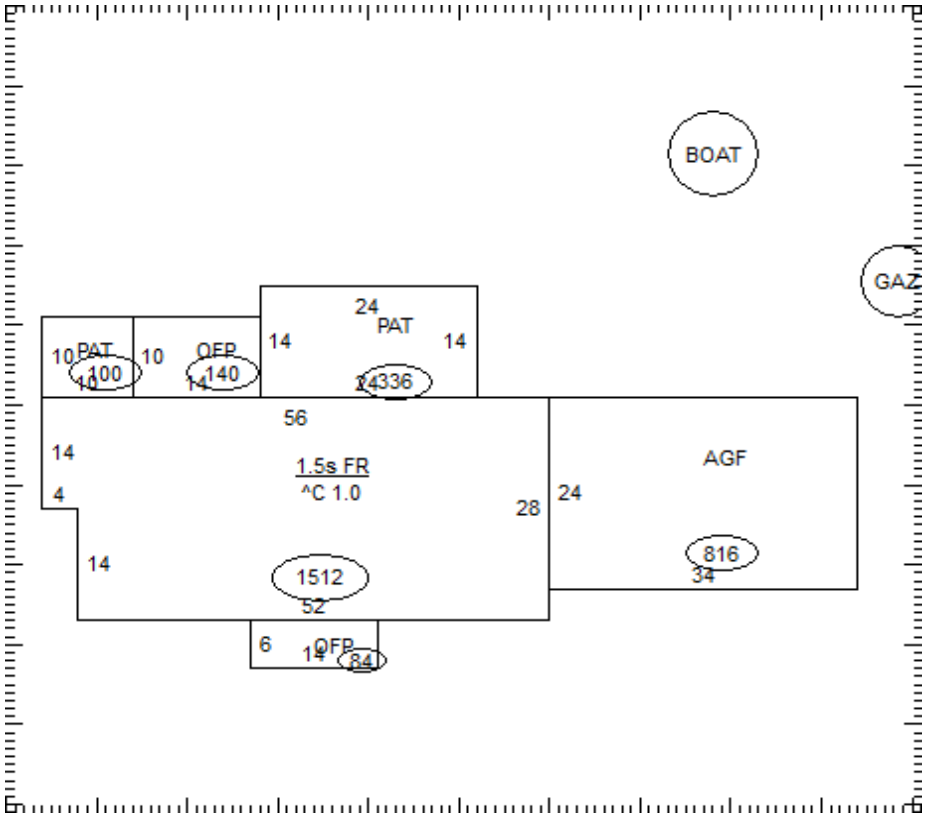

OCCUPANCY	ST.HT	SIZE	AREA	GRADE	PRICE	AGE	REMD	CND	UNADJ VAL	PHYS	PHYS VAL	FUNC	TRUE VAL
DWELLING	1.5	SK	2,268	B		2021		G	365,500	1	361,850		343,800
1 Gazebo		10x10	100	C		2021		A		2			0
2 Boat House		25x25	625	C	7.49	2021		A	4,680	2	4,590		4,600
3													
4													
5													
6													
7													
8													
9													
10													
11													
											TOTAL		348,400

09-108400.0304

COMMENTS

Dwelling has an Economic Factor of 95% (Rollback Basis=$407,300)