09-068000.0100

FRANKLIN TWP / CELINA SD

09-21-400-003

Property Class: 510

Neighborhood 009095-R150

Map: 04A
Block:
Card: 139
Bk: Pg:

SCHMITZ MICHAEL S & CHRISTIE L
SCHMITZ MICHAEL S & CHRISTIE L
5006 KITTLE RD
CELINA, OH 45822

LEGAL INFORMATION
S PT SW SE
ALSO NW PT NW NE SEC 28
RTS: 003-06-21
Acres:1.5719

	OWNERSHIP	ADDRESS	CITY	STATE	ZIP	DATE	AMOUNT	DEED:CONV#	JS	VALID
1	SCHMITZ MICHAEL S &	5006 KITTLE RD	CELINA	OH	45822	07/06/2023	208,000	WDC : 382	☐	■
2	PHLIPOT JAMIE J & KATHERYN	5006 KITTLE RD	CELINA	OH	45822	05/04/2021	192,500	WDC : 344	☐	■
3	CHAPMAN CLAY & DIANE T	5006 KITTLE RD	CELINA	OH	45822	03/31/2014	100,000	WDC : 169	☐	■

X: ☐ TTO LISTER: HK DATE: 03/21/2022 TIME: 12:00:00 AM ■ LETTER ☐ LETTER REC'D GIS CODE Minor Sub

STREET/ROAD	TOPOGRAPHY	PU-UTILITIES-PR		NEIGHBORHOOD	INFLUENCE FACTORS	
■ PAVED	■ LEVEL	☐ WATER	☐	☐ IMPROVING	☐ A. NO ROAD	☐ F. RESTRICT
☐ GRAVEL	☐ HIGH	☐ SEWER	☐	■ STATIC	☐ B. TOPGRHY	☐ G. WOOD LT
☐ DIRT	☐ LOW	☐ GAS	☐	☐ DECLINING	☐ C. Ex Front	☐ H. VACANCY
☐ SIDEWALKS	☐ ROLLING	☐ ELECTRIC	☐	☐ OLD	☐ D. QUANTITY	☐ I. WATER FRONT
☐ CURBS	☐ STANDARD	■ STANDARD		☐ STANDARD	☐ E. SZ/SHAPE	☐ J. OTHER/CDU

PROPERTY LOCATION
5006 KITTLE RD, CELINA

COMMENT
TY2022:Net Gen=$3,025.50, Other Assessment=$0.00
DE22 ADD OFP, RMV INC
DE21 NOH; CONNECTED OUTBLDGS
DE20 TTO; DECREASE INC, ADD CPY/PAT, CPY TO SHED, CHG LT TO GAR
DE19 TTO; ADD ADDN TO DLWG & GAR @ 40% COMPL
DE19 TTO; ADD SHED, LT ETC @ 100% COMPL
DE17 DESKTOP REVIEW//ADD CPY

LAND COMPUTATIONS

LAND TYPE	SIZE	M RATE C	INF	M VALUE C
HS:Home Site	AC:1	24300		24,300 0
SM:Small Acreage	AC:0.5719	8500		4,900 0
Total Acres: 1.5719			TOTAL	29,200 0

VALUATION SUMMARY

VALUE YEAR		2023	2022	2021	2020	2020	2019	2017	2017
REASON FOR CHANGE		RAPP	NC	NC	RAPP	NC	NC	RAPP	MISC
APPRAISED VALUE	LAND	29,200	21,500	21,500	21,500	20,500	20,500	20,500	20,500
	IMPR	244,100	158,400	133,400	130,100	94,200	84,600	78,200	77,400
	TOTAL	273,300	179,900	154,900	151,600	114,700	105,100	98,700	97,900
ASSESSED VALUE	LAND	10,220	7,530	7,530	7,530	7,180	7,180	7,180	7,180
	IMPR	85,440	55,440	46,690	45,540	32,970	29,610	27,370	27,090
	TOTAL	95,660	62,970	54,220	53,070	40,150	36,790	34,550	34,270

OCCUPANCY	EXTERIOR
■ SF ☐ DU ☐ TR	☐ WOOD
☐ CONVERSION	☐ STUCCO
BUILDING TYPE	■ ALM/VYNL
☐ MOBILE HOME	☐ CONC BLK
☐ BI/TR LEVEL	☐ METAL
☐ MOD/MAN	☐ BRICK
☐ _____	☐ STONE

ROOFING	ROOF TYPE
☐ METAL	■ GABLE
☐ SLT/TLE	☐ HIP
■ SHINGLES	☐ GAMBREL
☐ SHAKES	☐ MANSARD
☐ COMPOSITE	☐ FLAT

FLOORS	B	1	2	3	U
CONCRETE	☐	☐	☐	☐	☐
WOOD	☐	☐	☐	☐	☐
TILE/COMPO	☐	■	☐	☐	☐
CARPET	☐	■	☐	☐	☐

INT. FINISH	B	1	2	3	U
PLASTER/DW	☐	■	☐	☐	☐
PANELING	☐	☐	☐	☐	☐
UNFINISHED	☐	☐	☐	☐	☐

ACCOMMODATIONS					
# OF ROOMS		8			
BEDROOMS		2			
FIREPLACES					

HEAT & AC	B	1	2	3	U
NO HEAT	☐	☐	☐	☐	☐
CTRL HEAT	☐	■	☐	☐	☐
HW/STEAM	☐	☐	☐	☐	☐
ELECTRIC	☐	☐	☐	☐	☐
HEAT PUMP	☐	☐	☐	☐	☐
FLR/WALL	☐	☐	☐	☐	☐
STVE/SPCE	☐	☐	☐	☐	☐
GEOTHERMAL	☐	☐	☐	☐	☐
OUTSIDE	☐	☐	☐	☐	☐
CTRL A/C	☐	☐	☐	☐	☐

PLUMBING	BASE ■				
X FULL BATH					
X HALF BATH		1			
X FIXTURES					

FLOOR	AREA	CONST	VALUE
1	2396	FR	264,180

SUBTOTAL		264,180
MULTI-FAMILY #	0	0
BUILDING TYPE	100%	0
BSMT FINISH	0 S.F.	0
FIREPLACE #	0	0
HEATING	0 S.F.	0
AIR COND	0 S.F.	0
PLUMBING #	2	2,420
GARAGES & CARPORTS		46,900
EXTRA FEATURES		7,700
SUBTOTAL		321,200
GRADE FACTOR		100 %
UNADJUSTED VALUE		321,200
FACTOR		100 %

SKETCH

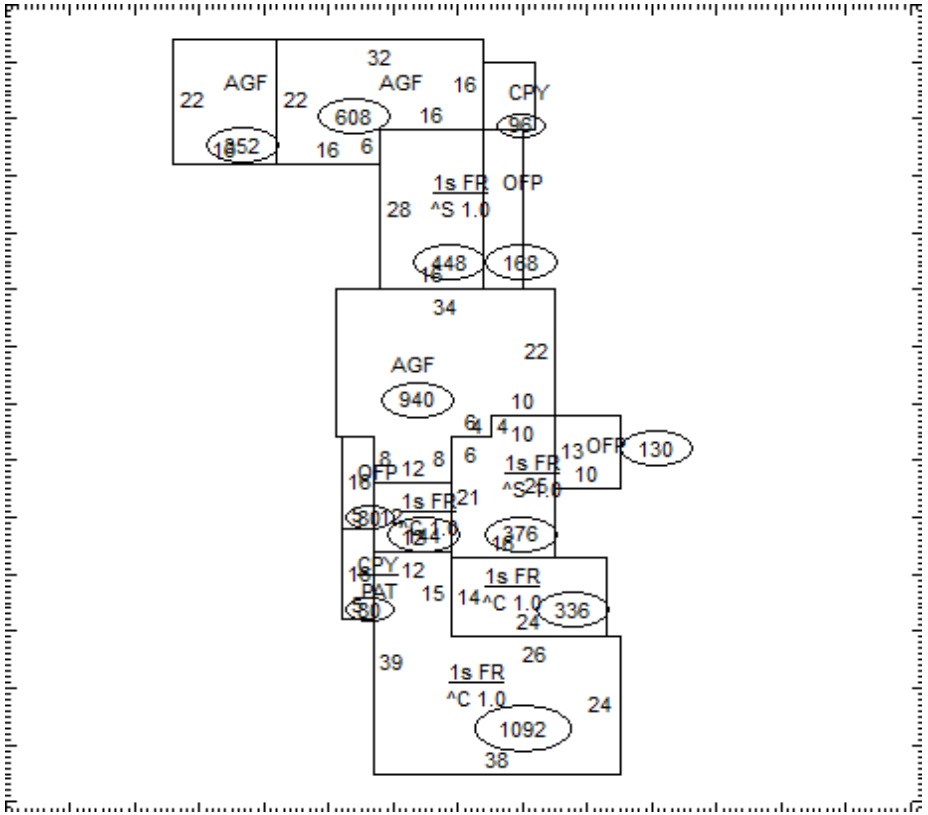

OCCUPANCY	ST.HT	SIZE	AREA	GRADE	PRICE	AGE	REMD	CND	UNADJ VAL	PHYS	PHYS VAL	FUNC	TRUE VAL
DWELLING	1	SK	2,396	C		1920	2018	A	321,200	24	244,110		244,100
1													
2													
3													
4													
5													
6													
7													
8													
9													
10													
11													
											TOTAL		244,100

09-068000.0100

COMMENTS

ACT AC 1.5719
Dwelling has an Economic Factor of 100%

09-068000.0100

FRANKLIN TWP / CELINA SD

09-21-400-003

Property Class: 510

Neighborhood 009095-R150

Map: 04A
Block:
Card: 139
Bk: Pg:

SCHMITZ MICHAEL S & CHRISTIE L
SCHMITZ MICHAEL S & CHRISTIE L
5006 KITTLE RD
CELINA, OH 45822

LEGAL INFORMATION
S PT SW SE
ALSO NW PT NW NE SEC 28
RTS: 003-06-21
Acres:1.5719

	OWNERSHIP	ADDRESS	CITY	STATE	ZIP	DATE	AMOUNT	DEED:CONV#	JS	VALID
1	BROWN PHYLLIS	5006 KITTLE RD	CELINA	OH	45822	01/18/2000	72,500	: A-M : 0	☐	☐
2							0	0	☐	☐
3							0	0	☐	☐

X: ☐ TTO LISTER: HK DATE: 03/21/2022 TIME: 12:00:00 AM ■ LETTER ☐ LETTER REC'D GIS CODE Minor Sub

STREET/ROAD	TOPOGRAPHY	PU-UTILITIES-PR	NEIGHBORHOOD	INFLUENCE FACTORS	
■ PAVED	■ LEVEL	☐ WATER ☐	☐ IMPROVING	☐ A. NO ROAD	☐ F. RESTRICT
☐ GRAVEL	☐ HIGH	☐ SEWER ☐	■ STATIC	☐ B. TOPGRHY	☐ G. WOOD LT
☐ DIRT	☐ LOW	☐ GAS ☐	☐ DECLINING	☐ C. Ex Front	☐ H. VACANCY
☐ SIDEWALKS	☐ ROLLING	☐ ELECTRIC ☐	☐ OLD	☐ D. QUANTITY	☐ I. WATER FRONT
☐ CURBS	☐ STANDARD	■ STANDARD	☐ STANDARD	☐ E. SZ/SHAPE	☐ J. OTHER/CDU

PROPERTY LOCATION
5006 KITTLE RD, CELINA

COMMENT

LAND COMPUTATIONS

LAND TYPE	SIZE	M RATE C	INF	M VALUE C
Total Acres: 1.5719			TOTAL	29,200 0

VALUATION SUMMARY

VALUE YEAR									
REASON FOR CHANGE									
APPRAISED VALUE	LAND								
	IMPR								
	TOTAL								
ASSESSED VALUE	LAND								
	IMPR								
	TOTAL								

OCCUPANCY	EXTERIOR
☐SF ☐DU ☐TR	☐ WOOD
☐CONVERSION	☐ STUCCO
BUILDING TYPE	☐ ALM/VYNL
☐ MOBILE HOME	☐ CONC BLK
☐ BI/TR LEVEL	☐ METAL
☐ MOD/MAN	☐ BRICK
☐ _____	☐ STONE

ROOFING	ROOF TYPE
☐ METAL	☐ GABLE
☐ SLT/TLE	☐ HIP
☐ SHINGLES	☐ GAMBREL
☐ SHAKES	☐ MANSARD
☐ COMPOSITE	☐ FLAT

FLOORS	B	1	2	3	U
CONCRETE	☐	☐	☐	☐	☐
WOOD	☐	☐	☐	☐	☐
TILE/COMPO	☐	☐	☐	☐	☐
CARPET	☐	☐	☐	☐	☐

INT. FINISH	B	1	2	3	U
PLASTER/DW	☐	☐	☐	☐	☐
PANELING	☐	☐	☐	☐	☐
UNFINISHED	☐	☐	☐	☐	☐

ACCOMMODATIONS					
# OF ROOMS					
BEDROOMS					
FIREPLACES					

HEAT & AC	B	1	2	3	U
NO HEAT	☐	☐	☐	☐	☐
CTRL HEAT	☐	☐	☐	☐	☐
HW/STEAM	☐	☐	☐	☐	☐
ELECTRIC	☐	☐	☐	☐	☐
HEAT PUMP	☐	☐	☐	☐	☐
FLR/WALL	☐	☐	☐	☐	☐
STVE/SPCE	☐	☐	☐	☐	☐
GEOTHERMAL	☐	☐	☐	☐	☐
OUTSIDE	☐	☐	☐	☐	☐
CTRL A/C	☐	☐	☐	☐	☐

PLUMBING	BASE ☐				
X FULL BATH					
X HALF BATH					
X FIXTURES					

FLOOR	AREA	CONST	VALUE

SUBTOTAL		0
MULTI-FAMILY #	0	0
BUILDING TYPE	000%	0
BSMT FINISH	0 S.F.	0
FIREPLACE #	0	0
HEATING	0 S.F.	0
AIR COND	0 S.F.	0
PLUMBING #	0	0
GARAGES & CARPORTS		0
EXTRA FEATURES		0
SUBTOTAL		0
GRADE FACTOR		%
UNADJUSTED VALUE		0
FACTOR		%

SKETCH

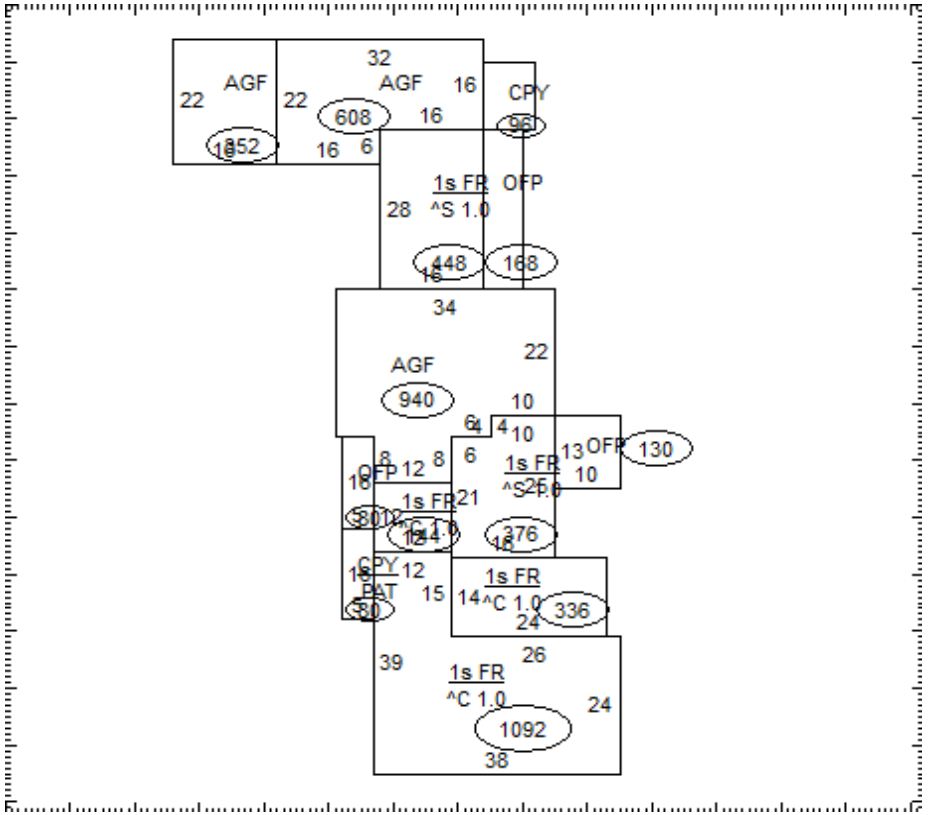

OCCUPANCY	ST.HT	SIZE	AREA	GRADE	PRICE	AGE	REMD	CND	UNADJ VAL	PHYS	PHYS VAL	FUNC	TRUE VAL
DWELLING		SK											
1													
2													
3													
4													
5													
6													
7													
8													
9													
10													
11													
												TOTAL	0

09-068000.0100

COMMENTS