09-063600.0000

MUHLENKAMP SCOTT A
MUHLENKAMP SCOTT A
7353 ST RTE 219
CELINA, OH 45822

FRANKLIN TWP / CELINA SD

09-21-251-002

LEGAL INFORMATION
PRAIRIE CREEK SUBDIVISION

LOT#: 1

QUALIFIED CREDITS:
HOMESTEAD

Property Class: 510
Neighborhood 095LA50-LA50
Map: 04A
Block:
Card: 42
Bk: Pg:

	OWNERSHIP	ADDRESS	CITY	STATE	ZIP	DATE	AMOUNT	DEED:CONV#	JS	VALID
1	MUHLENKAMP SCOTT A	7353 ST RTE 219	CELINA	OH	45822	05/10/2010	83,000	WDC : A-M : 282	☐	■
2	STOOKEY JANET	1545 BEAVERBROOK DR	DAYTON	OH	45432	05/10/2010	0	QCE : X : 0	☐	☐
3	STOOKEY WALLACE D &	1545 BEAVERBROOK DR	DAYTON	OH	45432	09/30/2002	98,000	: A-M : 0	☐	☐

X: ☐ TTO LISTER: DA DATE: 03/04/2005 TIME: 12:00:00 AM ☐ LETTER ■ LETTER REC'D GIS CODE

STREET/ROAD	TOPOGRAPHY	PU-UTILITIES-PR	NEIGHBORHOOD	INFLUENCE FACTORS	
■ PAVED	■ LEVEL	☐ WATER ☐	☐ IMPROVING	☐ A. NO ROAD	☐ F. RESTRICT
☐ GRAVEL	☐ HIGH	☐ SEWER ☐	■ STATIC	☐ B. TOPGRHY	☐ G. WOOD LT
☐ DIRT	☐ LOW	☐ GAS ☐	☐ DECLINING	☐ C. Ex Front	☐ H. VACANCY
☐ SIDEWALKS	☐ ROLLING	☐ ELECTRIC ☐	☐ OLD	☐ D. QUANTITY	☐ I. WATER FRONT
☐ CURBS	☐ STANDARD	■ STANDARD	☐ STANDARD	☐ E. SZ/SHAPE	☐ J. OTHER/CDU

PROPERTY LOCATION
7353 ST RT 219, CELINA

COMMENT
TY2022:Net Gen=$1,508.42, Other Assessment=$387.76

LAND COMPUTATIONS

LAND TYPE	SIZE	M RATE C	INF	M VALUE C
F:Front	F44 D182	ST440 DP109 ADJ480		21,100 0
			TOTAL	21,100 0

VALUATION SUMMARY

VALUE YEAR		2023	2020	2017					
REASON FOR CHANGE		RAPP	RAPP	RAPP					
APPRAISED VALUE	LAND	21,100	19,300	17,700					
	IMPR	147,200	97,400	85,900					
	TOTAL	168,300	116,700	103,600					
ASSESSED VALUE	LAND	7,390	6,760	6,200					
	IMPR	51,520	34,090	30,070					
	TOTAL	58,910	40,850	36,270					

OCCUPANCY	EXTERIOR
■SF ☐DU ☐TR	☐ WOOD
☐CONVERSION	☐ STUCCO
BUILDING TYPE	■ ALM/VYNL
☐ MOBILE HOME	☐ CONC BLK
☐ BI/TR LEVEL	☐ METAL
☐ MOD/MAN	☐ BRICK
☐ _____	☐ STONE

ROOFING	ROOF TYPE
☐ METAL	■ GABLE
☐ SLT/TLE	☐ HIP
■ SHINGLES	☐ GAMBREL
☐ SHAKES	☐ MANSARD
☐ COMPOSITE	☐ FLAT

FLOORS	B	1	2	3	U
CONCRETE	☐	☐	☐	☐	☐
WOOD	☐	☐	☐	☐	☐
TILE/COMPO	☐	■	☐	☐	☐
CARPET	☐	■	☐	☐	☐

INT. FINISH	B	1	2	3	U
PLASTER/DW	☐	■	☐	☐	☐
PANELING	☐	☐	☐	☐	☐
UNFINISHED	☐	☐	☐	☐	☐

ACCOMMODATIONS					
# OF ROOMS		5			
BEDROOMS		2			
FIREPLACES					

HEAT & AC	B	1	2	3	U
NO HEAT	☐	☐	☐	☐	☐
CTRL HEAT	☐	■	☐	☐	☐
HW/STEAM	☐	☐	☐	☐	☐
ELECTRIC	☐	☐	☐	☐	☐
HEAT PUMP	☐	☐	☐	☐	☐
FLR/WALL	☐	☐	☐	☐	☐
STVE/SPCE	☐	☐	☐	☐	☐
GEOTHERMAL	☐	☐	☐	☐	☐
OUTSIDE	☐	☐	☐	☐	☐
CTRL A/C	☐	■	☐	☐	☐

PLUMBING	BASE ■			
X FULL BATH		1		
X HALF BATH				
X FIXTURES				

FLOOR	AREA	CONST	VALUE
1	1360	FR	191,090
SUBTOTAL			191,090
MULTI-FAMILY #	0		0
BUILDING TYPE	100%		0
BSMT FINISH	0	S.F.	0
FIREPLACE #	0		0
HEATING	0	S.F.	0
AIR COND	1,360	S.F.	2,240
PLUMBING #	3		3,630
GARAGES & CARPORTS			15,400
EXTRA FEATURES			9,000
SUBTOTAL			221,360
GRADE FACTOR			100 %
UNADJUSTED VALUE			221,360
FACTOR			100 %

SKETCH

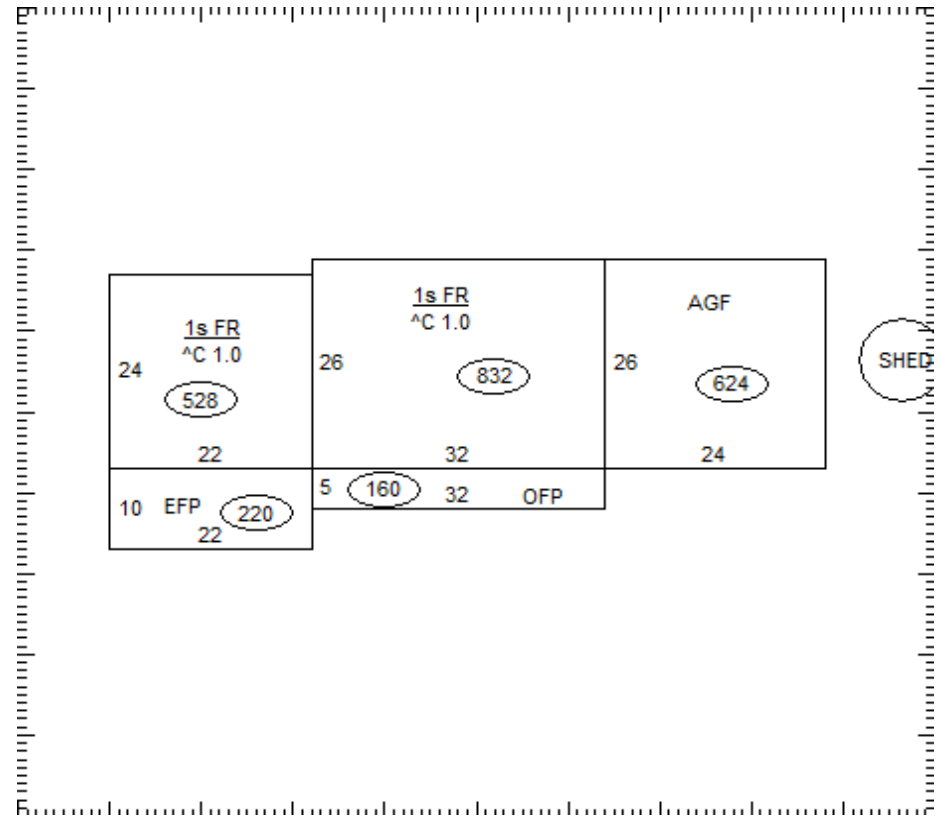

OCCUPANCY	ST.HT	SIZE	AREA	GRADE	PRICE	AGE	REMD	CND	UNADJ VAL	PHYS	PHYS VAL	FUNC	TRUE VAL
DWELLING	1	SK	1,360	C		1979		A	221,360	30	154,950		147,200
1 Shed		8x10	80	C		2000		A		37			0
2													
3													
4													
5													
6													
7													
8													
9													
10													
11													
											TOTAL		147,200

09-063600.0000

COMMENTS

Dwelling has an Economic Factor of 95%