09-035700.0415

FRANKLIN TWP / CELINA SD

09-20-178-032

Property Class: 510

Neighborhood 095CL80-CL80

Map: 05 D
Block:
Card: 67
Bk: Pg:

LAUX DEANN L
LAUX DEANN L
6672 TREASURE LN
CELINA, OH 45822

LEGAL INFORMATION
TREASURE COVE

LOT#: 11

	OWNERSHIP	ADDRESS	CITY	STATE	ZIP	DATE	AMOUNT	DEED:CONV#	JS	VALID
1	LAUX DEANN L	6672 TREASURE LN	CELINA	OH	45822	11/27/2017	149,000	WDC : 811	☐	■
2	FRIGGE JOHN E & K ANN	1208 RIDGEWOOD DR	TROY	OH	45373	08/13/2002	170,000	: A : 0	☐	■
3							0	0	☐	☐

X: ☐ TTO LISTER: DA DATE: 05/31/2005 TIME: 03:52:54 PM ☐ LETTER ■ LETTER REC'D GIS CODE

STREET/ROAD	TOPOGRAPHY	PU-UTILITIES-PR	NEIGHBORHOOD	INFLUENCE FACTORS	
■ PAVED	■ LEVEL	☐ WATER ☐	■ IMPROVING	☐ A. NO ROAD	☐ F. RESTRICT
☐ GRAVEL	☐ HIGH	☐ SEWER ☐	☐ STATIC	☐ B. TOPGRHY	☐ G. WOOD LT
☐ DIRT	☐ LOW	☐ GAS ☐	☐ DECLINING	☐ C. Ex Front	☐ H. VACANCY
☐ SIDEWALKS	☐ ROLLING	☐ ELECTRIC ☐	☐ OLD	☐ D. QUANTITY	☐ I. WATER FRONT
☐ CURBS	☐ STANDARD	■ STANDARD	☐ STANDARD	☐ E. SZ/SHAPE	☐ J. OTHER/CDU

PROPERTY LOCATION
6672 TREASURE LN

COMMENT
TY2022:Net Gen=$2,746.36, Other Assessment=$0.00
CHANNEL

LAND COMPUTATIONS

LAND TYPE	SIZE	M RATE C	INF	M VALUE C
F:Front	F80 D135	ST650 DP95 ADJ618		49,400 0
			TOTAL	49,400 0

VALUATION SUMMARY

VALUE YEAR		2023	2020	2017					
REASON FOR CHANGE		RAPP	RAPP	RAPP					
APPRAISED VALUE	LAND	49,400	38,000	34,200					
	IMPR	179,800	125,300	110,300					
	TOTAL	229,200	163,300	144,500					
ASSESSED VALUE	LAND	17,290	13,300	11,970					
	IMPR	62,930	43,860	38,610					
	TOTAL	80,220	57,160	50,580					

OCCUPANCY	EXTERIOR
■ SF ☐ DU ☐ TR	☐ WOOD
☐ CONVERSION	☐ STUCCO
BUILDING TYPE	■ ALM/VYNL
☐ MOBILE HOME	☐ CONC BLK
☐ BI/TR LEVEL	☐ METAL
☐ MOD/MAN	☐ BRICK
☐ _____	☐ STONE

ROOFING	ROOF TYPE
☐ METAL	■ GABLE
☐ SLT/TLE	☐ HIP
■ SHINGLES	☐ GAMBREL
☐ SHAKES	☐ MANSARD
☐ COMPOSITE	☐ FLAT

FLOORS	B	1	2	3	U
CONCRETE	☐	☐	☐	☐	☐
WOOD	☐	☐	☐	☐	☐
TILE/COMPO	☐	■	☐	☐	☐
CARPET	☐	■	☐	☐	☐

INT. FINISH	B	1	2	3	U
PLASTER/DW	☐	■	☐	☐	☐
PANELING	☐	☐	☐	☐	☐
UNFINISHED	☐	☐	☐	☐	☐

ACCOMMODATIONS					
# OF ROOMS		5			
BEDROOMS		3			
FIREPLACES					

HEAT & AC	B	1	2	3	U
NO HEAT	☐	☐	☐	☐	☐
CTRL HEAT	☐	■	☐	☐	☐
HW/STEAM	☐	☐	☐	☐	☐
ELECTRIC	☐	☐	☐	☐	☐
HEAT PUMP	☐	☐	☐	☐	☐
FLR/WALL	☐	☐	☐	☐	☐
STVE/SPCE	☐	☐	☐	☐	☐
GEOTHERMAL	☐	☐	☐	☐	☐
OUTSIDE	☐	☐	☐	☐	☐
CTRL A/C	☐	■	☐	☐	☐

PLUMBING	BASE ■				
X FULL BATH		1			
X HALF BATH					
X FIXTURES					

FLOOR	AREA	CONST	VALUE
1	1456	FR	197,780
SUBTOTAL			197,780
MULTI-FAMILY #		0	0
BUILDING TYPE		100%	0
BSMT FINISH		0 S.F.	0
FIREPLACE #		0	0
HEATING		0 S.F.	0
AIR COND		1,456 S.F.	2,400
PLUMBING #		3	3,630
GARAGES & CARPORTS			16,600
EXTRA FEATURES			2,100
SUBTOTAL			222,510
GRADE FACTOR			105 %
UNADJUSTED VALUE			233,640
FACTOR			100 %

SKETCH

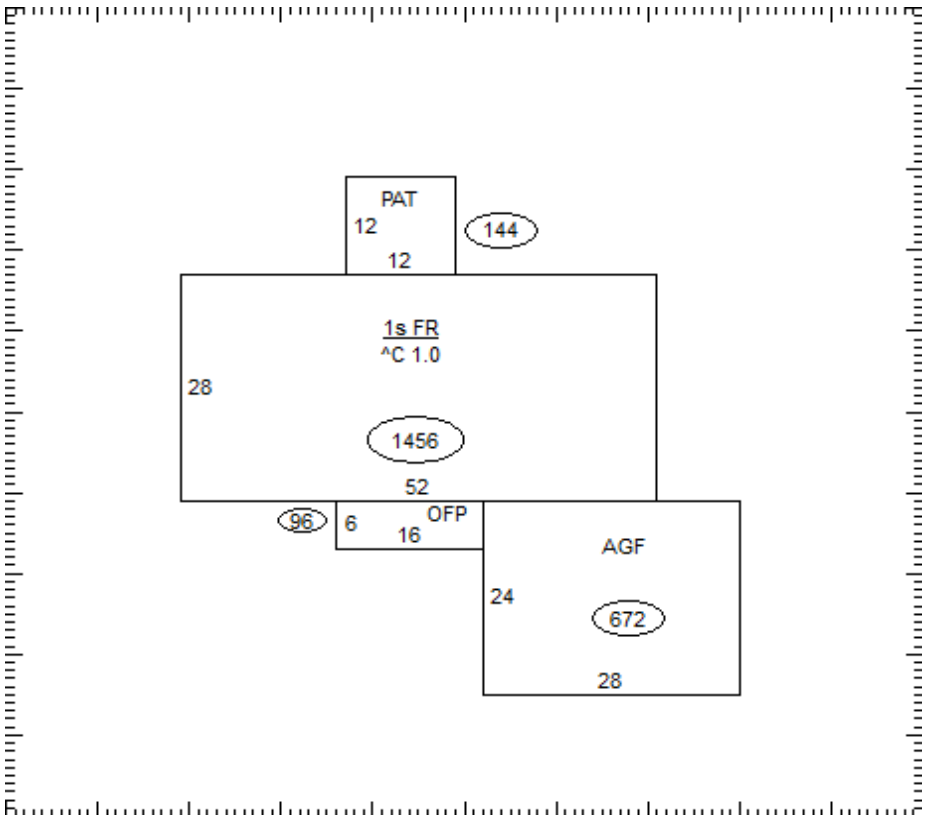

OCCUPANCY	ST.HT	SIZE	AREA	GRADE	PRICE	AGE	REMD	CND	UNADJ VAL	PHYS	PHYS VAL	FUNC	TRUE VAL
DWELLING	1	SK	1,456	C+		2000		G	233,640	19	189,250		179,800
1													
2													
3													
4													
5													
6													
7													
8													
9													
10													
11													
											TOTAL		179,800

09-035700.0415

COMMENTS

50 L/F BRICK TRIM 3' HIGH
Dwelling has an Economic Factor of 95%