08-064200.0000

DUBLIN TWP-ROCKFORD CORP / PARKWAY SD
02-17-280-009

Property Class: 510
Neighborhood 000802-TM50
Map: 9
Block:
Card: 116
Bk: Pg:

WANNAMACHER TRENT D & KAYLA J
WANNAMACHER TRENT D & KAYLA J
207 N WEST ST
ROCKFORD, OH 45882

LEGAL INFORMATION
WISTERMAN ADD
AKA OL 43
LOT#: 52

	OWNERSHIP	ADDRESS	CITY	STATE	ZIP	DATE	AMOUNT	DEED:CONV#	JS	VALID
1	WANNAMACHER TRENT D &	207 N WEST ST	ROCKFORD	OH	45882	08/23/2016	119,000	WDC : 569	☐	■
2	DOMEIER DEBRA	1119 KENSINGTON	CELINA	OH	45822	12/01/2003	10,000	WDC : A : 0	☐	■
3	DOMEIER DEBRA	1119 KENSINGTON	CELINA	OH	45822	12/01/2003	10,000	: A : 0	☐	■

X: ☐ TTO LISTER: DATE: 04/02/2012 TIME: 12:00:00 AM ☐ LETTER ☐ LETTER REC'D GIS CODE

STREET/ROAD	TOPOGRAPHY	PU-UTILITIES-PR	NEIGHBORHOOD	INFLUENCE FACTORS	
☐ PAVED	☐ LEVEL	☐ WATER ☐	☐ IMPROVING	☐ A. NO ROAD	☐ F. RESTRICT
☐ GRAVEL	☐ HIGH	☐ SEWER ☐	☐ STATIC	☐ B. TOPGRHY	☐ G. WOOD LT
☐ DIRT	☐ LOW	☐ GAS ☐	☐ DECLINING	☐ C. Ex Front	☐ H. VACANCY
☐ SIDEWALKS	☐ ROLLING	☐ ELECTRIC ☐	☐ OLD	☐ D. QUANTITY	☐ I. WATER FRONT
☐ CURBS	☐ STANDARD	■ STANDARD	☐ STANDARD	☐ E. SZ/SHAPE	☐ J. OTHER/CDU

PROPERTY LOCATION
207 N WEST ST

COMMENT
TY2022:Net Gen=$1,890.42, Other Assessment=$2.00
DE16 DESKTOP REVIEW CHG: add pat & shed
DE11 OWNER PROVIDED BLUEPRINT-ONLY 1/2 BASMNT
DE17 RMV OWN OCC/DIDN'T RET APP

LAND COMPUTATIONS

LAND TYPE	SIZE	M RATE C	INF	M VALUE C
F:Front	F66 D149	ST325 DP100 ADJ325		21,500 0
			TOTAL	21,500 0

VALUATION SUMMARY

VALUE YEAR		2023	2020	2017					
REASON FOR CHANGE		RAPP	RAPP	RAPP					
APPRAISED VALUE	LAND	21,500	16,400	13,900					
	IMPR	143,100	103,900	87,100					
	TOTAL	164,600	120,300	101,000					
ASSESSED VALUE	LAND	7,530	5,740	4,870					
	IMPR	50,090	36,370	30,490					
	TOTAL	57,620	42,110	35,360					

OCCUPANCY	EXTERIOR
■ SF ☐ DU ☐ TR	☐ WOOD
☐ CONVERSION	☐ STUCCO
BUILDING TYPE	■ ALM/VYNL
☐ MOBILE HOME	☐ CONC BLK
☐ BI/TR LEVEL	☐ METAL
☐ MOD/MAN	■ BRICK
☐ _____	☐ STONE

ROOFING	ROOF TYPE
☐ METAL	■ GABLE
☐ SLT/TLE	☐ HIP
■ SHINGLES	☐ GAMBREL
☐ SHAKES	☐ MANSARD
☐ COMPOSITE	☐ FLAT

FLOORS	B	1	2	3	U
CONCRETE	■	☐	☐	☐	☐
WOOD	☐	☐	☐	☐	☐
TILE/COMPO	☐	■	☐	☐	☐
CARPET	☐	■	☐	☐	☐

INT. FINISH	B	1	2	3	U
PLASTER/DW	☐	☐	☐	☐	☐
PANELING	☐	☐	☐	☐	☐
UNFINISHED	■	☐	☐	☐	☐

ACCOMMODATIONS					
# OF ROOMS		5			
BEDROOMS		3			
FIREPLACES					

HEAT & AC	B	1	2	3	U
NO HEAT	☐	☐	☐	☐	☐
CTRL HEAT	☐	■	☐	☐	☐
HW/STEAM	☐	☐	☐	☐	☐
ELECTRIC	☐	☐	☐	☐	☐
HEAT PUMP	☐	☐	☐	☐	☐
FLR/WALL	☐	☐	☐	☐	☐
STVE/SPCE	☐	☐	☐	☐	☐
GEOTHERMAL	☐	☐	☐	☐	☐
OUTSIDE	☐	☐	☐	☐	☐
CTRL A/C	☐	■	☐	☐	☐

PLUMBING	BASE ■			
X FULL BATH		1		
X HALF BATH				
X FIXTURES				

FLOOR	AREA	CONST	VALUE
1	1344	FR	192,140
BSMT	672		9,610
SUBTOTAL			201,750
MULTI-FAMILY #	0		0
BUILDING TYPE	100%		0
BSMT FINISH	0 S.F.		0
FIREPLACE #	0		0
HEATING	0 S.F.		0
AIR COND	1,344 S.F.		2,220
PLUMBING #	3		3,630
GARAGES & CARPORTS			12,000
EXTRA FEATURES			2,000
SUBTOTAL			221,600
GRADE FACTOR			105 %
UNADJUSTED VALUE			232,680
FACTOR			100 %

SKETCH

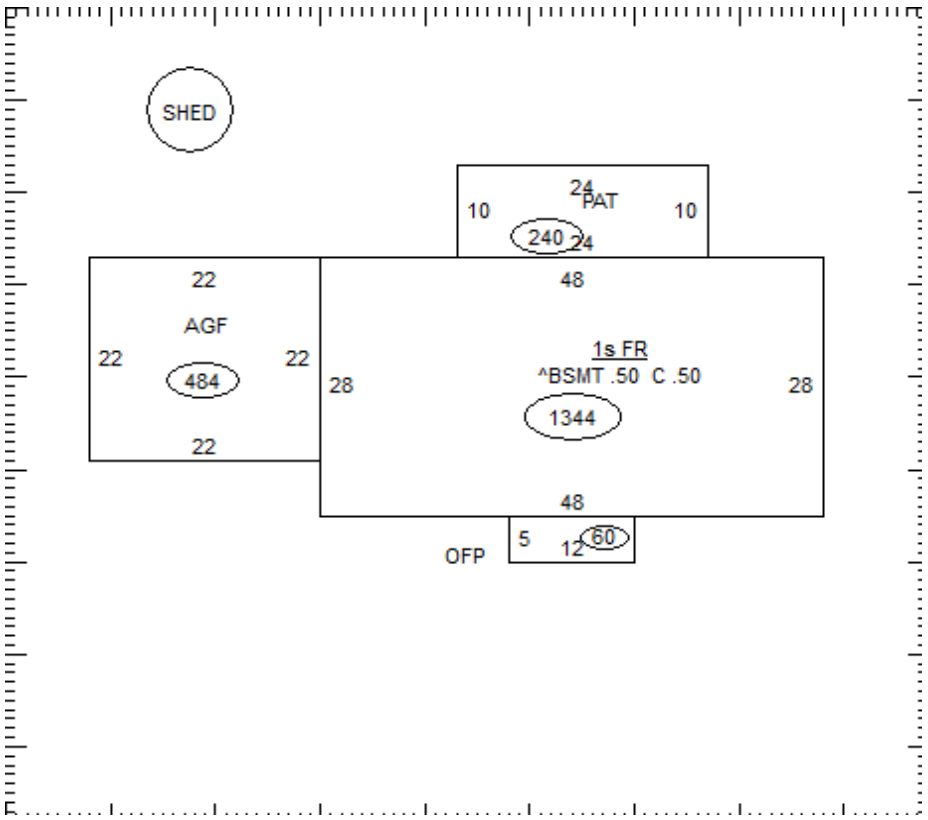

OCCUPANCY	ST.HT	SIZE	AREA	GRADE	PRICE	AGE	REMD	CND	UNADJ VAL	PHYS	PHYS VAL	FUNC	TRUE VAL
DWELLING	1	SK	1,344	C+		2004		A	232,680	18	190,800		143,100
1 Shed		10x8	80	C		2010		A		21			0
2													
3													
4													
5													
6													
7													
8													
9													
10													
11													
											TOTAL		143,100

08-064200.0000

COMMENTS

70 L/F BRICK 8 (560)
Dwelling has an Economic Factor of 75%