08-058200.0508

BAGLEY MICHAEL R & DEBRA L
BAGLEY MICHAEL R & DEBRA L
307 N HOLLY
ROCKFORD, OH 45882
Created in 2006 From 08-058200.0500 due to Split

DUBLIN TWP-ROCKFORD CORP / PARKWAY SD
02-17-251-008

LEGAL INFORMATION
PT LOT 27

Acres:0.5460

Property Class: 510
Neighborhood 000803
Map:
Block:
Card:
Bk: Pg:

	OWNERSHIP	ADDRESS	CITY	STATE	ZIP	DATE	AMOUNT	DEED:CONV#	JS	VALID
1	BAGLEY MICHAEL R & DEBRA	307 N HOLLY	ROCKFORD	OH	45882	11/12/2020	280,000	WDC : 849	☐	■
2	HEISER RODNEY & JAN L	307 N HOLLY DR	ROCKFORD	OH	45882	03/03/2006	27,600	WDC : A : 160	☐	☐
3							0	0	☐	☐

X: ☐ TTO LISTER: BC DATE: 03/23/2007 TIME: 12:00:00 AM ☐ LETTER ☐ LETTER REC'D GIS CODE

STREET/ROAD	TOPOGRAPHY	PU-UTILITIES-PR	NEIGHBORHOOD	INFLUENCE FACTORS	
☐ PAVED	☐ LEVEL	☐ WATER ☐	☐ IMPROVING	☐ A. NO ROAD	☐ F. RESTRICT
☐ GRAVEL	☐ HIGH	☐ SEWER ☐	☐ STATIC	☐ B. TOPGRHY	☐ G. WOOD LT
☐ DIRT	☐ LOW	☐ GAS ☐	☐ DECLINING	☐ C. Ex Front	☐ H. VACANCY
☐ SIDEWALKS	☐ ROLLING	☐ ELECTRIC ☐	☐ OLD	☐ D. QUANTITY	☐ I. WATER FRONT
☐ CURBS	☐ STANDARD	☐ STANDARD	☐ STANDARD	☐ E. SZ/SHAPE	☐ J. OTHER/CDU

PROPERTY LOCATION
307 HOLLY LN

COMMENT
TY2022:Net Gen=$3,712.26, Other Assessment=$2.00
DE16 DESKTOP REVIEW CHG: add ofp, wddks, cor stry hgt
DE22 INCREASE FIN BSMNT, FP

LAND COMPUTATIONS

LAND TYPE	SIZE	M RATE C	INF	M VALUE C
HS:Home Site <1 @ 34070*0.81	AC:0.546	27600		27,600 0
Total Acres: .5460			TOTAL	27,600 0

VALUATION SUMMARY

VALUE YEAR		2023	2022	2020	2017				
REASON FOR CHANGE		RAPP	NC	RAPP	RAPP				
APPRAISED VALUE	LAND	27,600	15,800	15,800	13,400				
	IMPR	292,900	226,200	205,700	180,200				
	TOTAL	320,500	242,000	221,500	193,600				
ASSESSED VALUE	LAND	9,660	5,530	5,530	4,690				
	IMPR	102,520	79,170	72,000	63,070				
	TOTAL	112,180	84,700	77,530	67,760				

OCCUPANCY	EXTERIOR
■ SF ☐ DU ☐ TR	☐ WOOD
☐ CONVERSION	☐ STUCCO
BUILDING TYPE	■ ALM/VYNL
☐ MOBILE HOME	☐ CONC BLK
☐ BI/TR LEVEL	☐ METAL
☐ MOD/MAN	■ BRICK
☐ _____	☐ STONE
ROOFING	**ROOF TYPE**
☐ METAL	■ GABLE
☐ SLT/TLE	☐ HIP
■ SHINGLES	☐ GAMBREL
☐ SHAKES	☐ MANSARD
☐ COMPOSITE	☐ FLAT

FLOORS	B	1	2	3	U
CONCRETE	■	☐	☐	☐	☐
WOOD	☐	■	☐	☐	☐
TILE/COMPO	■	■	☐	☐	☐
CARPET	■	■	☐	☐	☐

INT. FINISH	B	1	2	3	U
PLASTER/DW	■	■	☐	☐	☐
PANELING	■	☐	☐	☐	☐
UNFINISHED	☐	☐	☐	☐	☐

ACCOMMODATIONS					
# OF ROOMS	4	7			
BEDROOMS	2	2			
FIREPLACES		1			

HEAT & AC	B	1	2	3	U
NO HEAT	☐	☐	☐	☐	☐
CTRL HEAT	■	■	■	☐	☐
HW/STEAM	☐	☐	☐	☐	☐
ELECTRIC	☐	☐	☐	☐	☐
HEAT PUMP	☐	☐	☐	☐	☐
FLR/WALL	☐	☐	☐	☐	☐
STVE/SPCE	☐	☐	☐	☐	☐
GEOTHERMAL	☐	☐	☐	☐	☐
OUTSIDE	☐	☐	☐	☐	☐
CTRL A/C	■	■	■	☐	☐

PLUMBING					BASE ■
X FULL BATH	1	2			
X HALF BATH					
X FIXTURES		2			

FLOOR	AREA	CONST	VALUE
1	2073	FR	239,760
.25	463	FR	48,860
BSMT	2073		29,640
SUBTOTAL			318,260
MULTI-FAMILY #	0		0
BUILDING TYPE	100%		0
BSMT FINISH	1,853 S.F.		26,500
FIREPLACE #	1		4,400
HEATING	0 S.F.		0
AIR COND	4,389 S.F.		7,240
PLUMBING #	11		13,310
GARAGES & CARPORTS			16,600
EXTRA FEATURES			7,200
SUBTOTAL			393,510
GRADE FACTOR			115 %
UNADJUSTED VALUE			452,540
FACTOR			100 %

SKETCH

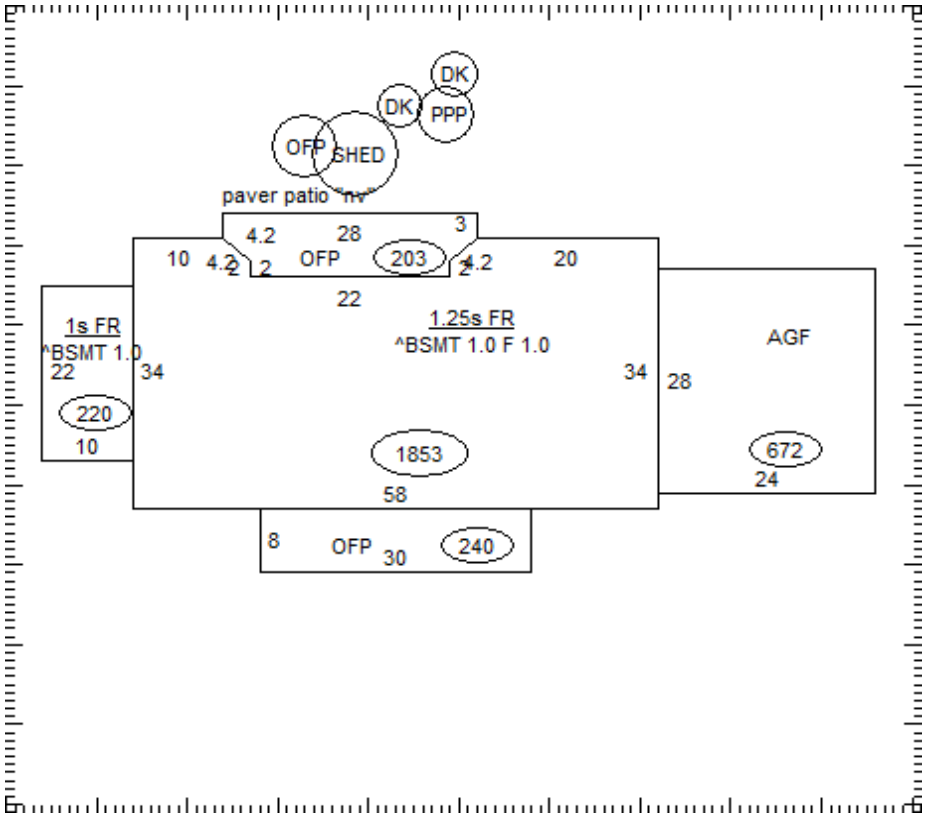

OCCUPANCY	ST.HT	SIZE	AREA	GRADE	PRICE	AGE	REMD	CND	UNADJ VAL	PHYS	PHYS VAL	FUNC	TRUE VAL
DWELLING	1.25	SK	2,536	B-		2006		A	452,540	15	384,660		288,500
1 Shed		10x18	180	C	9.90	2010		A	1,780	21	1,410		1,400
2 OFP		4x18	72	C	16.04	2010		A	1,150	21	910		900
3 Pool - PP		24x24	576	C		2010		A		21			0
4 WDDK		10x16	160	C	10.13	2010		A	1,620	21	1,280		1,300
5 WDDK		12x8	96	C	10.13	2010		A	970	21	770		800
6													
7													
8													
9													
10													
11													
											TOTAL		292,900

08-058200.0508

COMMENTS

DORMERS ARE DECORATIVE ONLY
Dwelling has an Economic Factor of 75% (Rollback Basis=$316,100)