08-034500.0000

DUBLIN TWP-ROCKFORD CORP / PARKWAY SD
02-17-256-003

Property Class: 510
Neighborhood 000802-TM50
Map: 09
Block:
Card: 125
Bk: Pg:

KROGMAN TREVOR J & SAMANTHA N
KROGMAN TREVOR J & SAMANTHA N
610 FRONT ST
ROCKFORD, OH 45882

LEGAL INFORMATION
VANTILBURG ADDITION
ALSO PT VAC ALLEY
LOT#: 286

	OWNERSHIP	ADDRESS	CITY	STATE	ZIP	DATE	AMOUNT	DEED:CONV#	JS	VALID
1	KROGMAN TREVOR J &	610 FRONT ST	ROCKFORD	OH	45882	01/21/2021	235,000	WDC : 57	☐	■
2	DUGAN JOHN C & AMY L	610 FRONT ST	ROCKFORD	OH	45882	09/23/1996	79,000	: A : 0	☐	■
3							0	0	☐	☐

X: Signature | ☐ TTO | LISTER: RK | DATE: 10/20/2004 | TIME: 10:11:51 AM | ■ LETTER | ☐ LETTER REC'D | GIS CODE

STREET/ROAD	TOPOGRAPHY	PU-UTILITIES-PR	NEIGHBORHOOD	INFLUENCE FACTORS	
■ PAVED	■ LEVEL	☐ WATER ☐	☐ IMPROVING	☐ A. NO ROAD	☐ F. RESTRICT
☐ GRAVEL	☐ HIGH	☐ SEWER ☐	■ STATIC	☐ B. TOPGRHY	☐ G. WOOD LT
☐ DIRT	☐ LOW	☐ GAS ☐	☐ DECLINING	☐ C. Ex Front	☐ H. VACANCY
☐ SIDEWALKS	☐ ROLLING	☐ ELECTRIC ☐	☐ OLD	☐ D. QUANTITY	☐ I. WATER FRONT
☐ CURBS	☐ STANDARD	■ STANDARD	☐ STANDARD	☐ E. SZ/SHAPE	☐ J. OTHER/CDU

PROPERTY LOCATION
610 W FRONT ST, ROCKFORD

COMMENT
TY2022:Net Gen=$2,178.30, Other Assessment=$2.00
DE16 DESKTOP REVIEW CHG: add outbldgs, bw & pat

LAND COMPUTATIONS

LAND TYPE	SIZE	M RATE C	INF	M VALUE C
F:Front	F66 D132	ST325 DP94 ADJ306		20,200 0
			TOTAL	20,200 0

VALUATION SUMMARY

VALUE YEAR		2023	2020	2017					
REASON FOR CHANGE		RAPP	RAPP	RAPP					
APPRAISED VALUE	LAND	20,200	15,300	13,000					
	IMPR	170,500	126,600	105,500					
	TOTAL	190,700	141,900	118,500					
ASSESSED VALUE	LAND	7,070	5,360	4,550					
	IMPR	59,680	44,310	36,930					
	TOTAL	66,750	49,670	41,480					

OCCUPANCY	EXTERIOR
■ SF ☐ DU ☐ TR	☐ WOOD
☐ CONVERSION	☐ STUCCO
BUILDING TYPE	☐ ALM/VYNL
☐ MOBILE HOME	☐ CONC BLK
☐ BI/TR LEVEL	☐ METAL
☐ MOD/MAN	■ BRICK
☐ _____	☐ STONE
ROOFING	**ROOF TYPE**
☐ METAL	☐ GABLE
☐ SLT/TLE	■ HIP
■ SHINGLES	☐ GAMBREL
☐ SHAKES	☐ MANSARD
☐ COMPOSITE	☐ FLAT

FLOORS	B	1	2	3	U
CONCRETE	■	☐	☐	☐	☐
WOOD	☐	■	■	☐	☐
TILE/COMPO	☐	☐	■	☐	☐
CARPET	☐	■	■	☐	☐

INT. FINISH	B	1	2	3	U
PLASTER/DW	☐	■	■	☐	☐
PANELING	☐	☐	☐	☐	☐
UNFINISHED	■	☐	☐	☐	☐

ACCOMMODATIONS					
# OF ROOMS			4		
BEDROOMS			3		
FIREPLACES					

HEAT & AC	B	1	2	3	U
NO HEAT	☐	☐	☐	☐	☐
CTRL HEAT	☐	■	■	☐	☐
HW/STEAM	☐	☐	☐	☐	☐
ELECTRIC	☐	☐	☐	☐	☐
HEAT PUMP	☐	☐	☐	☐	☐
FLR/WALL	☐	☐	☐	☐	☐
STVE/SPCE	☐	☐	☐	☐	☐
GEOTHERMAL	☐	☐	☐	☐	☐
OUTSIDE	☐	☐	☐	☐	☐
CTRL A/C	☐	■	■	☐	☐

PLUMBING			BASE	■	
X FULL BATH			1		
X HALF BATH					
X FIXTURES					

FLOOR	AREA	CONST	VALUE
1	240	FR	28,040
1	1788	BRK	223,500
BSMT	1212		17,330

SUBTOTAL		268,870
MULTI-FAMILY #	0	0
BUILDING TYPE	100%	0
BSMT FINISH	0 S.F.	0
FIREPLACE #	0	0
HEATING	0 S.F.	0
AIR COND	2,028 S.F.	3,350
PLUMBING #	3	3,630
GARAGES & CARPORTS		13,500
EXTRA FEATURES		7,400
SUBTOTAL		296,750
GRADE FACTOR		105 %
UNADJUSTED VALUE		311,590
FACTOR		100 %

SKETCH

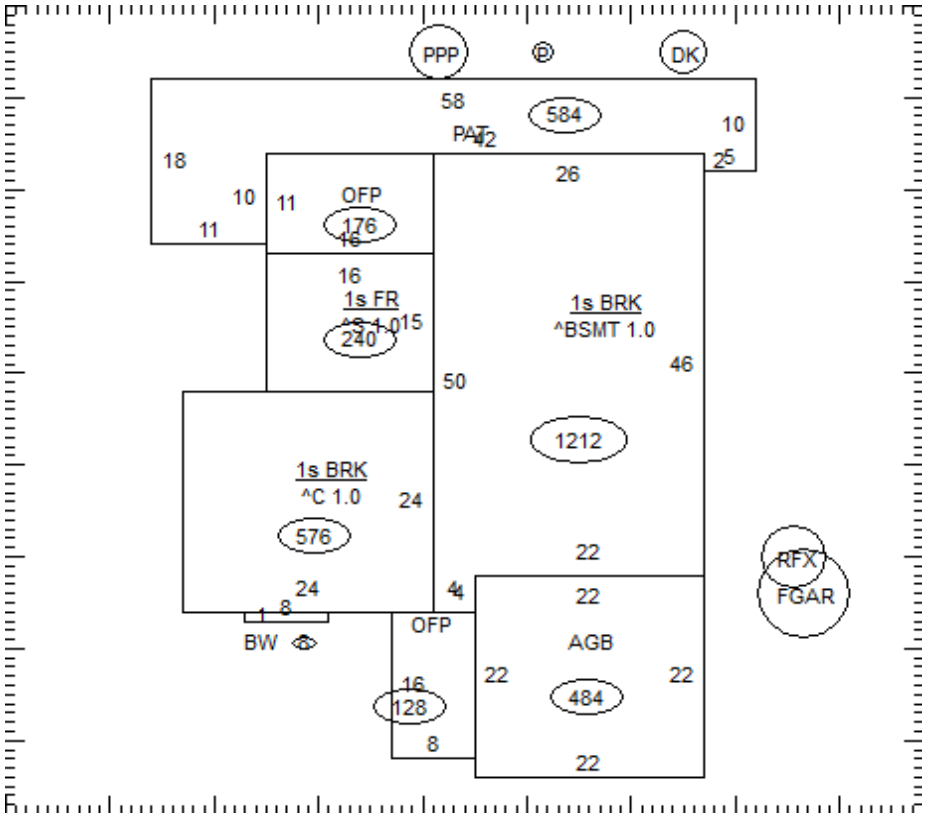

OCCUPANCY	ST.HT	SIZE	AREA	GRADE	PRICE	AGE	REMD	CND	UNADJ VAL	PHYS	PHYS VAL	FUNC	TRUE VAL
DWELLING	1	SK	2,028	C+		1979		A	311,590	30	218,110		163,600
1 Gar - Frame		14x20	280	C	23.70	2001		A	6,640	37	4,180		4,200
2 Rfx		14x4	56	C	8.91	2001		A	500	37	320		300
3 WDDK		0x0	200	C	10.13	2001		A	2,030	37	1,280		1,300
4 Patio		28x16	448	C	4.05	2001		A	1,810	37	1,140		1,100
5 Pool - PP		18x18	324	C		2001		A		37			0
6													
7													
8													
9													
10													
11													
											TOTAL		170,500

08-034500.0000

COMMENTS

Dwelling has an Economic Factor of 75% (Rollback Basis=$183,800)