07-028700.0110

DUBLIN TWP / PARKWAY SD

02-13-100-011

Property Class: 510

Neighborhood 000720-RS80

Map: 7
Block:
Card: 29
Bk: Pg:

MIRACLE JAMES L & REBEKAH
MIRACLE JAMES L & REBEKAH
5717 SHELLEY RD
ROCKFORD, OH 45882

LEGAL INFORMATION
DEERFIELD VILLAGE SUBD
PHASE 1 PLATTED 8/22/95
LOT#: 3

	OWNERSHIP	ADDRESS	CITY	STATE	ZIP	DATE	AMOUNT	DEED:CONV#	JS	VALID
1	MIRACLE JAMES L & REBEKAH	5717 SHELLEY RD	ROCKFORD	OH	45882	07/19/2017	14,000	WDC : 468	☐	■
2	BEOUGHER LOWELL E &	415 E MARKET ST	ROCKFORD	OH	45882	09/22/1995	12,900	: A : 0	☐	■
3							0	0	☐	☐

X: ■ TTO LISTER: HK DATE: 02/24/2021 TIME: 12:00:00 AM ☐ LETTER ☐ LETTER REC'D GIS CODE

STREET/ROAD	TOPOGRAPHY	PU-UTILITIES-PR	NEIGHBORHOOD	INFLUENCE FACTORS	
■ PAVED	■ LEVEL	☐ WATER ☐	☐ IMPROVING	☐ A. NO ROAD	☐ F. RESTRICT
☐ GRAVEL	☐ HIGH	☐ SEWER ☐	■ STATIC	☐ B. TOPGRHY	☐ G. WOOD LT
☐ DIRT	☐ LOW	☐ GAS ☐	☐ DECLINING	☐ C. Ex Front	☐ H. VACANCY
☐ SIDEWALKS	☐ ROLLING	☐ ELECTRIC ☐	☐ OLD	☐ D. QUANTITY	☐ I. WATER FRONT
☐ CURBS	☐ STANDARD	■ STANDARD	☐ STANDARD	☐ E. SZ/SHAPE	☐ J. OTHER/CDU

PROPERTY LOCATION
5717 SHELLEY RD

COMMENT
TY2022:Net Gen=$3,865.46, Other Assessment=$2.00
DE19 NOH; ADD DWLG @ 70% COMPL
DE20 ADD PAT, RMV INC
DE21 TTO; ADD SHED

LAND COMPUTATIONS

LAND TYPE	SIZE	M RATE C	INF	M VALUE C
F:Front	F110 D300	ST320 DP120 ADJ384		42,200 0
			TOTAL	42,200 0

VALUATION SUMMARY

VALUE YEAR		2023	2020	2020	2019	2019	2019	2019	2017
REASON FOR CHANGE		RAPP	RAPP	NC	MISC	MISC	RCLS	NC	RAPP
APPRAISED VALUE	LAND	42,200	27,700	23,100	23,100	23,100	23,100	23,100	17,300
	IMPR	359,600	237,600	226,300	157,600	164,900	235,600	235,600	0
	TOTAL	401,800	265,300	249,400	180,700	188,000	258,700	258,700	17,300
ASSESSED VALUE	LAND	14,770	9,700	8,090	8,090	8,090	8,090	8,090	6,060
	IMPR	125,860	83,160	79,210	55,160	57,720	82,460	82,460	0
	TOTAL	140,630	92,860	87,300	63,250	65,810	90,550	90,550	6,060

OCCUPANCY	EXTERIOR
■SF ☐DU ☐TR	☐ WOOD
☐CONVERSION	☐ STUCCO
BUILDING TYPE	■ ALM/VYNL
☐ MOBILE HOME	☐ CONC BLK
☐ BI/TR LEVEL	☐ METAL
☐ MOD/MAN	☐ BRICK
☐ _____	☐ STONE

ROOFING	ROOF TYPE
☐ METAL	■ GABLE
☐ SLT/TLE	☐ HIP
■ SHINGLES	☐ GAMBREL
☐ SHAKES	☐ MANSARD
☐ COMPOSITE	☐ FLAT

FLOORS	B	1	2	3	U
CONCRETE	■	☐	☐	☐	☐
WOOD	☐	☐	☐	☐	☐
TILE/COMPO	☐	■	☐	☐	☐
CARPET	☐	■	■	☐	☐

INT. FINISH	B	1	2	3	U
PLASTER/DW	■	■	■	☐	☐
PANELING	☐	☐	☐	☐	☐
UNFINISHED	■	☐	☐	☐	☐

ACCOMMODATIONS					
# OF ROOMS	1	6	3		
BEDROOMS		1	3		
FIREPLACES		1			

HEAT & AC	B	1	2	3	U
NO HEAT	☐	☐	☐	☐	☐
CTRL HEAT	☐	■	■	☐	☐
HW/STEAM	☐	☐	☐	☐	☐
ELECTRIC	☐	☐	☐	☐	☐
HEAT PUMP	☐	☐	☐	☐	☐
FLR/WALL	☐	☐	☐	☐	☐
STVE/SPCE	☐	☐	☐	☐	☐
GEOTHERMAL	☐	☐	☐	☐	☐
OUTSIDE	☐	☐	☐	☐	☐
CTRL A/C	☐	■	■	☐	☐

PLUMBING			BASE ■		
X FULL BATH			1		
X HALF BATH		1			
X FIXTURES					

FLOOR	AREA	CONST	VALUE
1	1632	FR	211,330
2ND	761	FR	47,300
BSMT	871		12,460

SUBTOTAL		271,090
MULTI-FAMILY #	0	0
BUILDING TYPE	100%	0
BSMT FINISH	0 S.F.	0
FIREPLACE #	1	4,400
HEATING	0 S.F.	0
AIR COND	2,393 S.F.	3,950
PLUMBING #	5	6,050
GARAGES & CARPORTS		17,900
EXTRA FEATURES		19,000
SUBTOTAL		322,390
GRADE FACTOR		115 %
UNADJUSTED VALUE		370,750
FACTOR		100 %

SKETCH

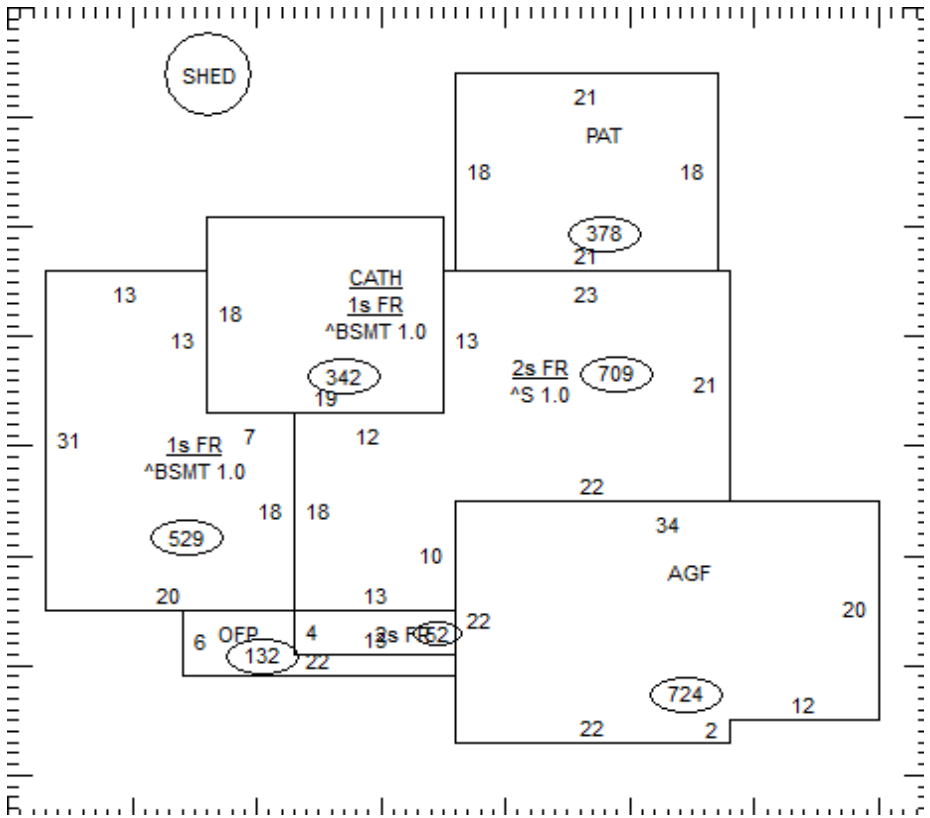

OCCUPANCY	ST.HT	SIZE	AREA	GRADE	PRICE	AGE	REMD	CND	UNADJ VAL	PHYS	PHYS VAL	FUNC	TRUE VAL
DWELLING	2	SK	2,393	B-		2018		G	370,750	3	359,630		359,600
1 Shed		8x10	80	C		2020		A		3			0
2													
3													
4													
5													
6													
7													
8													
9													
10													
11													
											TOTAL		359,600

07-028700.0110

COMMENTS

Dwelling has an Economic Factor of 100%