07-021900.0000

DUBLIN TWP / PARKWAY SD

02-14-100-005

Property Class: 510

Neighborhood 009075-R150

Map: 06
Block:
Card: 35
Bk: Pg:

VOISARD BRIAN & HICKS JULIE
VOISARD BRIAN & HICKS JULIE
5159 SHELLEY RD
ROCKFORD, OH 45882

LEGAL INFORMATION
PT E 1/2 SW
GODFREY RESERVE
SEC 4 RTS: 002-04-00
Acres:1.1000

	OWNERSHIP	ADDRESS	CITY	STATE	ZIP	DATE	AMOUNT	DEED:CONV#	JS	VALID
1	VOISARD BRIAN & HICKS	5159 SHELLEY RD	ROCKFORD	OH	45882	11/05/2021	80,000	2:WDC : 940	☐	■
2	HURST GRANT L	PO BOX 412	DECATUR	IN	46733	05/26/2010	40,000	WDC : A-M : 309	☐	☐
3	WILSON GEORGE M	5198 SHELLEY RD	ROCKFORD	OH	45882	12/19/2008	0	QCE : X : 0	☐	☐

X: ☐ TTO LISTER: HK DATE: 06/26/2023 TIME: 12:00:00 AM ☐ LETTER ☐ LETTER REC'D GIS CODE Minor Sub

STREET/ROAD	TOPOGRAPHY	PU-UTILITIES-PR	NEIGHBORHOOD	INFLUENCE FACTORS	
☐ PAVED	☐ LEVEL	☐ WATER ☐	☐ IMPROVING	☐ A. NO ROAD	☐ F. RESTRICT
☐ GRAVEL	☐ HIGH	☐ SEWER ☐	☐ STATIC	☐ B. TOPGRHY	☐ G. WOOD LT
☐ DIRT	☐ LOW	☐ GAS ☐	☐ DECLINING	☐ C. Ex Front	☐ H. VACANCY
☐ SIDEWALKS	☐ ROLLING	☐ ELECTRIC ☐	☐ OLD	☐ D. QUANTITY	☐ I. WATER FRONT
☐ CURBS	☐ STANDARD	■ STANDARD	☐ STANDARD	☐ E. SZ/SHAPE	☐ J. OTHER/CDU

PROPERTY LOCATION
5198 SHELLEY RD, ROCKFORD

COMMENT
TY2022:Net Gen=$722.26, Other Assessment=$4.08
DE13 RMV HS- DOES NOT QUALIFY
DE17 DESKTOP RVW CHG: rfx
DE21 ALLOW VAC, RMV HTG & PLMG, DWLG UNLIVABLE
DE22 HSE & BARN STILL HERE
DE23 DWLG BEING DEMO'D
NC24 CHK FOR COMPL DEMO// NEW DLWG?

LAND COMPUTATIONS

LAND TYPE	SIZE	M RATE C	INF	M VALUE C
HS:Home Site	AC:1	17660		17,700 0
SM:Small Acreage	AC:0.1	8500		900 0
Total Acres: 1.1000			TOTAL	18,600 0

VALUATION SUMMARY

VALUE YEAR		2023	2022	2020	2017	2017			
REASON FOR CHANGE		REMB	REMB	RAPP	RAPP	MISC			
APPRAISED VALUE	LAND	18,600	18,400	18,400	17,200	14,400			
	IMPR	7,200	29,900	101,400	88,600	80,500			
	TOTAL	25,800	48,300	119,800	105,800	94,900			
ASSESSED VALUE	LAND	6,510	6,440	6,440	6,020	5,040			
	IMPR	2,520	10,470	35,490	31,010	28,180			
	TOTAL	9,030	16,910	41,930	37,030	33,220			

OCCUPANCY	EXTERIOR
■ SF ☐ DU ☐ TR	■ WOOD
☐ CONVERSION	☐ STUCCO
BUILDING TYPE	☐ ALM/VYNL
☐ MOBILE HOME	☐ CONC BLK
☐ BI/TR LEVEL	☐ METAL
☐ MOD/MAN	☐ BRICK
☐ _____	☐ STONE

ROOFING	ROOF TYPE
■ METAL	☐ GABLE
☐ SLT/TLE	☐ HIP
☐ SHINGLES	☐ GAMBREL
☐ SHAKES	☐ MANSARD
☐ COMPOSITE	■ FLAT

FLOORS	B	1	2	3	U
CONCRETE	☐	☐	☐	☐	☐
WOOD	☐	☐	☐	☐	☐
TILE/COMPO	☐	■	☐	☐	☐
CARPET	☐	■	☐	☐	☐

INT. FINISH	B	1	2	3	U
PLASTER/DW	☐	■	☐	☐	☐
PANELING	☐	■	☐	☐	☐
UNFINISHED	☐	☐	☐	☐	☐

ACCOMMODATIONS					
# OF ROOMS		7			
BEDROOMS		4			
FIREPLACES		2			

HEAT & AC	B	1	2	3	U
NO HEAT	☐	■	☐	☐	☐
CTRL HEAT	☐	☐	☐	☐	☐
HW/STEAM	☐	☐	☐	☐	☐
ELECTRIC	☐	☐	☐	☐	☐
HEAT PUMP	☐	☐	☐	☐	☐
FLR/WALL	☐	☐	☐	☐	☐
STVE/SPCE	☐	☐	☐	☐	☐
GEOTHERMAL	☐	☐	☐	☐	☐
OUTSIDE	☐	☐	☐	☐	☐
CTRL A/C	☐	☐	☐	☐	☐

PLUMBING	BASE ☐				
X FULL BATH					
X HALF BATH					
X FIXTURES					

FLOOR	AREA	CONST	VALUE
1	1907	FR	227,730
BSMT	1430		20,450
SUBTOTAL			248,180
MULTI-FAMILY #	0		0
BUILDING TYPE	100%		0
BSMT FINISH	0 S.F.		0
FIREPLACE #	2		8,800
HEATING	1,907 S.F.		-7,250
AIR COND	0 S.F.		0
PLUMBING #	0		-6,050
GARAGES & CARPORTS			14,200
EXTRA FEATURES			8,300
SUBTOTAL			266,180
GRADE FACTOR			80 %
UNADJUSTED VALUE			212,940
FACTOR			100 %

SKETCH

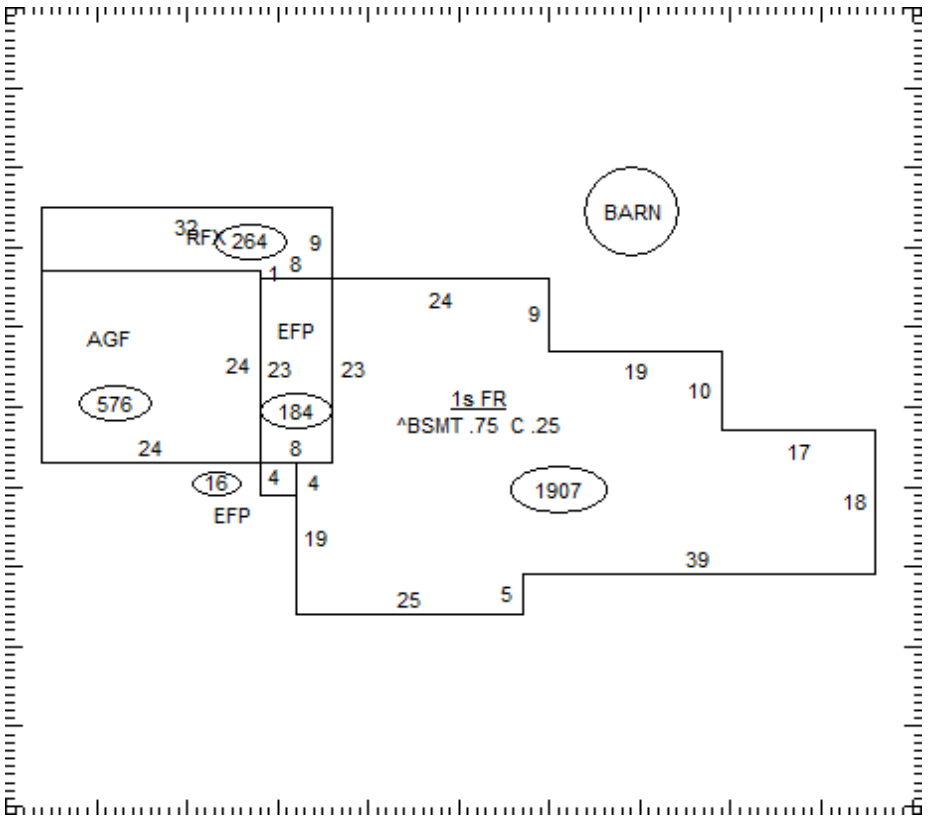

OCCUPANCY	ST.HT	SIZE	AREA	GRADE	PRICE	AGE	REMD	CND	UNADJ VAL	PHYS	PHYS VAL	FUNC	TRUE VAL
DWELLING	1	SK	1,907	D		1956		P	212,940	70	63,880	CDU90	7,000
1 Barn	14	22x36	792	C	12.00	1950		P	9,500	95	480	CDU50	200
2													
3													
4													
5													
6													
7													
8													
9													
10													
11													
												TOTAL	7,200

07-021900.0000

COMMENTS

ASBESTOS SIDING
Dwelling has an Economic Factor of 109%

07-021900.0000

DUBLIN TWP / PARKWAY SD

02-14-100-005

Property Class: 510

Neighborhood 009075-R150

Map: 06
Block:
Card: 35
Bk: Pg:

VOISARD BRIAN & HICKS JULIE
VOISARD BRIAN & HICKS JULIE
5159 SHELLEY RD
ROCKFORD, OH 45882

LEGAL INFORMATION
PT E 1/2 SW
GODFREY RESERVE
SEC 4 RTS: 002-04-00
Acres:1.1000

	OWNERSHIP	ADDRESS	CITY	STATE	ZIP	DATE	AMOUNT	DEED:CONV#	JS	VALID
1	WILSON GEORGE M TRUSTEE	5198 SHELLEY RD	ROCKFORD	OH	45882	02/25/2005	0	QCE : X : 0	☐	☐
2	WILSON GEORGE M	5198 SHELLEY RD	ROCKFORD	OH	45882		0	: 0	☐	☐
3							0	0	☐	☐

X: ☐ TTO LISTER: HK DATE: 06/26/2023 TIME: 12:00:00 AM ☐ LETTER ☐ LETTER REC'D GIS CODE Minor Sub

STREET/ROAD	TOPOGRAPHY	PU-UTILITIES-PR	NEIGHBORHOOD	INFLUENCE FACTORS	
☐ PAVED	☐ LEVEL	☐ WATER ☐	☐ IMPROVING	☐ A. NO ROAD	☐ F. RESTRICT
☐ GRAVEL	☐ HIGH	☐ SEWER ☐	☐ STATIC	☐ B. TOPGRHY	☐ G. WOOD LT
☐ DIRT	☐ LOW	☐ GAS ☐	☐ DECLINING	☐ C. Ex Front	☐ H. VACANCY
☐ SIDEWALKS	☐ ROLLING	☐ ELECTRIC ☐	☐ OLD	☐ D. QUANTITY	☐ I. WATER FRONT
☐ CURBS	☐ STANDARD	■ STANDARD	☐ STANDARD	☐ E. SZ/SHAPE	☐ J. OTHER/CDU

PROPERTY LOCATION
5198 SHELLEY RD, ROCKFORD

COMMENT

LAND COMPUTATIONS

LAND TYPE	SIZE	M RATE C	INF	M VALUE C
Total Acres: 1.1000			TOTAL	18,600 0

VALUATION SUMMARY

VALUE YEAR									
REASON FOR CHANGE									
APPRAISED VALUE	LAND								
	IMPR								
	TOTAL								
ASSESSED VALUE	LAND								
	IMPR								
	TOTAL								

OCCUPANCY	EXTERIOR
☐SF ☐DU ☐TR	☐ WOOD
☐CONVERSION	☐ STUCCO
BUILDING TYPE	☐ ALM/VYNL
☐ MOBILE HOME	☐ CONC BLK
☐ BI/TR LEVEL	☐ METAL
☐ MOD/MAN	☐ BRICK
☐ _____	☐ STONE

ROOFING	ROOF TYPE
☐ METAL	☐ GABLE
☐ SLT/TLE	☐ HIP
☐ SHINGLES	☐ GAMBREL
☐ SHAKES	☐ MANSARD
☐ COMPOSITE	☐ FLAT

FLOORS	B	1	2	3	U
CONCRETE	☐	☐	☐	☐	☐
WOOD	☐	☐	☐	☐	☐
TILE/COMPO	☐	☐	☐	☐	☐
CARPET	☐	☐	☐	☐	☐

INT. FINISH	B	1	2	3	U
PLASTER/DW	☐	☐	☐	☐	☐
PANELING	☐	☐	☐	☐	☐
UNFINISHED	☐	☐	☐	☐	☐

ACCOMMODATIONS					
# OF ROOMS					
BEDROOMS					
FIREPLACES					

HEAT & AC	B	1	2	3	U
NO HEAT	☐	☐	☐	☐	☐
CTRL HEAT	☐	☐	☐	☐	☐
HW/STEAM	☐	☐	☐	☐	☐
ELECTRIC	☐	☐	☐	☐	☐
HEAT PUMP	☐	☐	☐	☐	☐
FLR/WALL	☐	☐	☐	☐	☐
STVE/SPCE	☐	☐	☐	☐	☐
GEOTHERMAL	☐	☐	☐	☐	☐
OUTSIDE	☐	☐	☐	☐	☐
CTRL A/C	☐	☐	☐	☐	☐

PLUMBING	BASE ☐				
X FULL BATH					
X HALF BATH					
X FIXTURES					

FLOOR	AREA	CONST	VALUE

SUBTOTAL		0
MULTI-FAMILY #	0	0
BUILDING TYPE	000%	0
BSMT FINISH	0 S.F.	0
FIREPLACE #	0	0
HEATING	0 S.F.	0
AIR COND	0 S.F.	0
PLUMBING #	0	0
GARAGES & CARPORTS		0
EXTRA FEATURES		0
SUBTOTAL		0
GRADE FACTOR		%
UNADJUSTED VALUE		0
FACTOR		%

SKETCH

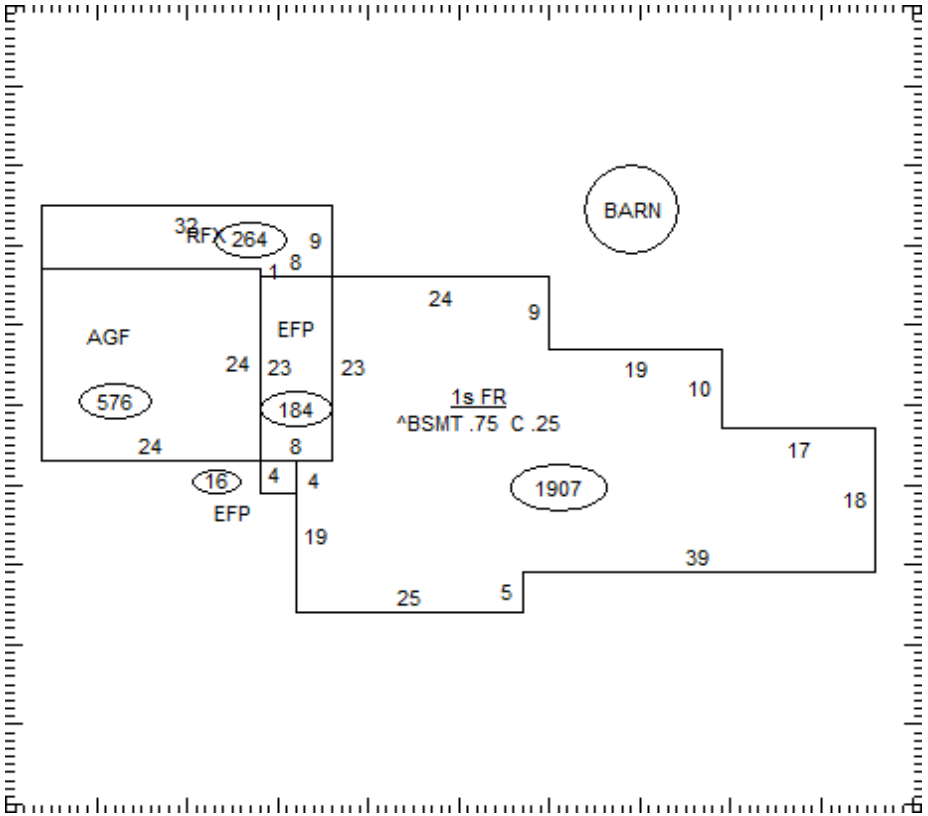

OCCUPANCY	ST.HT	SIZE	AREA	GRADE	PRICE	AGE	REMD	CND	UNADJ VAL	PHYS	PHYS VAL	FUNC	TRUE VAL
DWELLING		SK											
1													
2													
3													
4													
5													
6													
7													
8													
9													
10													
11													
												TOTAL	0

07-021900.0000

COMMENTS